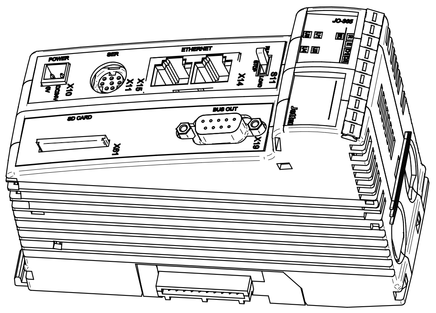
POWER
SER
ETHERNET
JC-365
SD CARD
BUS OUT

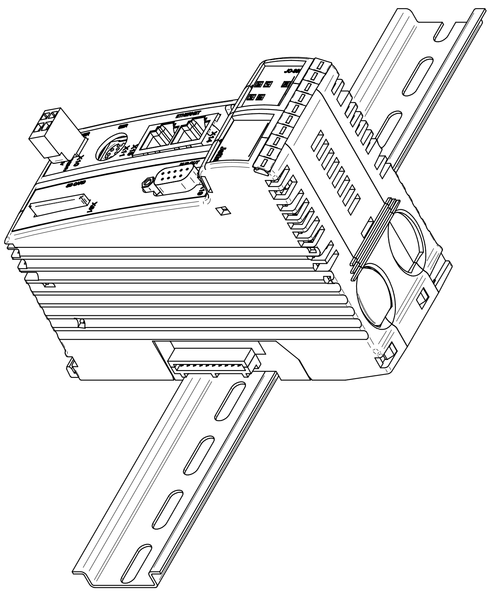

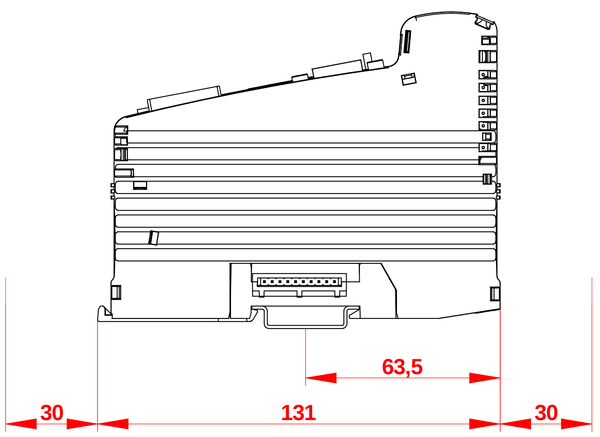
63,5
30
131
30

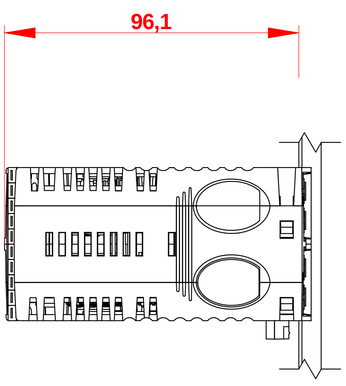
96,1

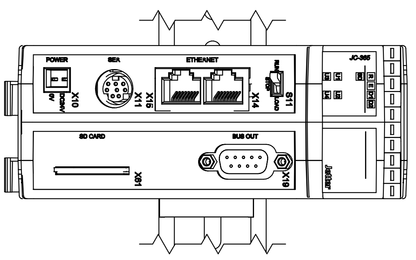
POWER
SER
ETHERNET
JC-365
SD CARD
BUS OUT
Jetter

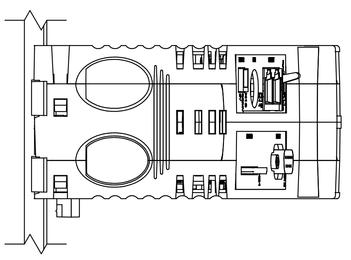

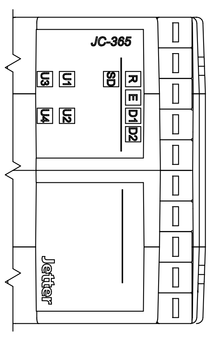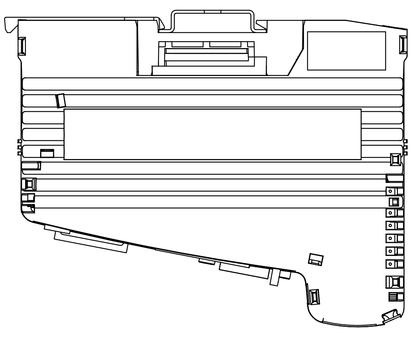
JC-365
Jetter