JI-PC501

Industrial PC

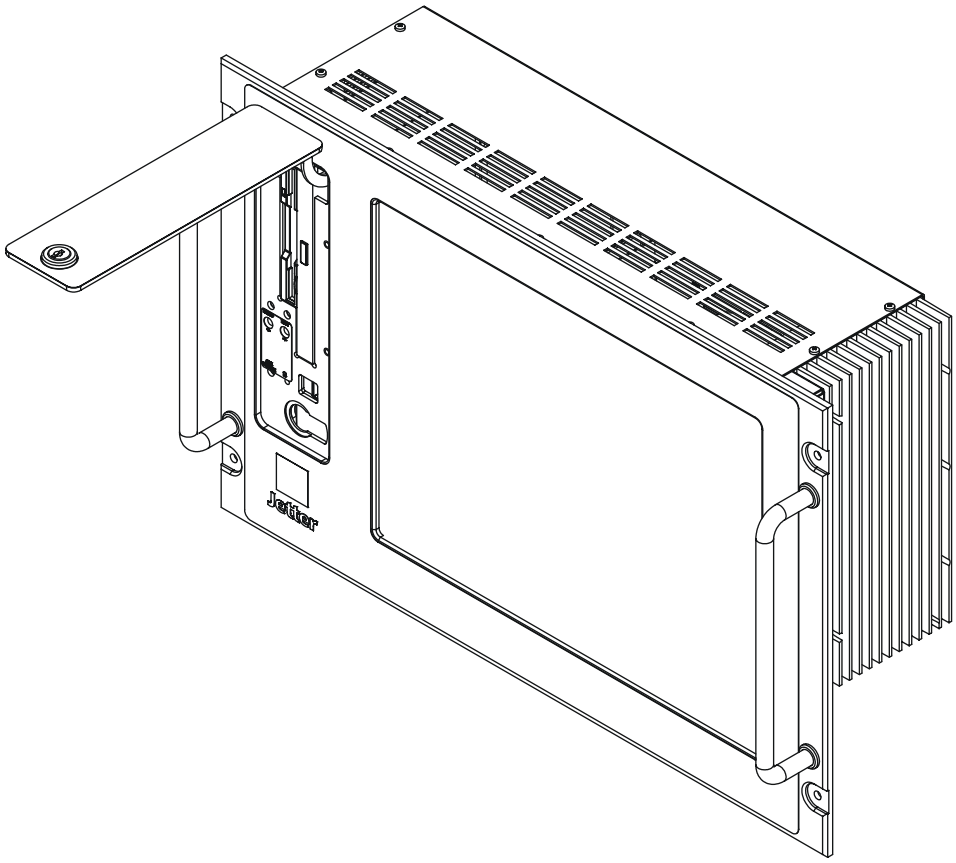

JetWeb

Installation Instructions

Jetter
AKTIENGESELLSCHAFT

Article # 60866444 / Rev. 1.00 August 2004 / Printed in Germany

Revision 1.00

Jetter AG reserves the right to make alterations to its products in the interest of technical progress. These alterations need not be documented in every single case.

This manual and the information contained herein have been compiled with due diligence. Jetter AG shall not be liable for errors contained herein or for incidental or consequential damage in connection with the furnishing, performance, or use of this material.

The brand names and product names used in this document are trademarks or registered trademarks of the respective title owner.

How to Contact us:

Jetter AG
Gräterstraße 2
D-71642 Ludwigsburg
Germany

Phone - Switchboard:	++49 7141/2550-0
Phone - Sales:	++49 7141/2550-433
Phone - Technical Hotline:	++49 7141 2550-444
Telefax:	++49 7141 2550-425
E-Mail - Sales:	sales@jetter.de
E-Mail - Technical Hotline:	hotline@jetter.de
Internet Address:	http://www.jetter.de

This installation manual is part of the industrial PC JI-PC501:

Model: _____

Serial #: _____

Year of Manufacture: _____

Order #: _____

CE

To be entered by the customer:

Inventory #: _____

Place of operation: _____

© Copyright 2004 by Jetter AG. All rights reserved.

Significance of this Installation Manual

This installation manual is part of the industrial PC JI-PC501

- and must be kept in a way that it is always at hand until the industrial PC JI-PC501 will be disposed of.
- Pass this manual on if the industrial PC JI-PC501 is sold or loaned/leased out.

In any case you encounter difficulties to clearly understand this installation manual, please contact the manufacturer.
We would appreciate any suggestions and contributions on your part and would ask you to contact us. This will help us to produce manuals that are more user-friendly and to address your wishes and requirements.

This manual contains important information on how to transport/store, erect, install, operate, maintain and repair the industrial PC JI-PC501.
Therefore, this person must carefully read, understand and observe this manual, and especially the safety instructions.

Missing or inadequate knowledge of the manual results in the loss of any claim of liability on part of Jetter AG. Therefore, the operating company is recommended to have the instruction of the persons concerned confirmed in writing.

History

Edition	Comment
1.00	Original issue

Description of Symbols

Warning

This sign is to indicate a possible impending danger of serious injury or death.

Caution

This sign is to indicate a possible impending danger of light injury. This sign is also to warn you of material damage.

Important

This sign is to indicate a possible impending situation which might bring damage to the product or to its surroundings.
It also identifies requirements necessary to ensure faultless operation.

Note

You will be informed of various possible applications and will receive further useful suggestions.
It also gives you words of advice on how to efficiently use hardware and software in order to avoid unnecessary efforts.

· / -

Enumerations are marked by full stops, strokes or scores.

Operating instructions are marked by this arrow.

Automatically running processes or results to be achieved are marked by this arrow.

PC and user interface keys.

This symbol informs you of additional references (data sheets, literature, etc.) associated with the given subject, product, etc. It also helps you to find your way around this manual.

Scope of Supply

- JI-PC501
- JI-PC501 Installation Manual
- LV-670 User´s Manual

Table of Contents

1 Safety Instructions 9
1.1 Ensure your Own Safety 11
1.2 Notes on Safety as regards the Installation 12
1.3 Notes on Safety as regards Commissioning 14
1.4 Residual Dangers 15
1.5 Instructions on EMI 16
2 Physical Dimensions 19
3 Operating Parameters 21
4 Technical Data 25
5 Avoiding Malfunctions 27
6 Description of Connections 29

List of Appendices

Appendix A: Recent Revisions 35
Appendix B: List of Abbreviations 36
Appendix C: List of Illustrations 38
Appendix D: Index 39

1 Safety Instructions

The industrial PC JI-PC501 complies with the safety regulations and standards in effect. Special emphasis was given to the safety of the users.

Of course, the user should adhere to the following regulations:

- relevant accident prevention regulations,
- accepted safety rules,
- EU guidelines and other country-specific regulations.
- If this device is used in industry, the OSHA regulations for prevention of accidents shall be followed.

Usage as Agreed Upon

Usage as agreed upon includes operation in accordance with the installation manual.

The industrial PC JI-PC501 is designed and approved for operation in an electric cabinet **only**. The JI-PC501 may only be operated within the limits of the stated data. For more information on technical data refer to chapter 4: "Technical Data", page 25. The supply voltage of the industrial PC JI-PC501 is AC 100 V through 240 V. Thus, the JI-PC501 is subject to the “Low Voltage” Directive (LVD) of the EC.

The industrial PC- JI-PC501 is used to control machinery such as conveyors, production plants, and handling machines.

Usage Other than Agreed Upon

The industrial PC JI-PC501 must not be used in technical systems which to a high degree have to be fail-save, e.g. ropeways, aeroplanes, and life support systems.

If the industrial PC is to be run under operating conditions, which differ from the conditions mentioned in chapter 3: "Operating Parameters", page 21, the manufacturer is to be contacted beforehand.

Who is Permitted to operate the industrial PC?

Only instructed, trained and authorized persons are permitted to operate the industrial PC JI-PC501.

Transport:	Only by personnel with knowledge in handling electrostatically sensitive components.
Installation:	Only by specialists with training in electrical engineering.
Commissioning:	Only by specialists with extensive knowledge of and experience with electrical engineering / drive technology.

Modifications and Alterations to the Module

Due to safety reasons, no modifications and alterations to the industrial PC JI-PC501 and its functions are allowed. Any modifications to the industrial PC JI-PC501 not expressly authorised by the manufacturer will result in a loss of any liability claims to Jetter AG.

The original parts are specifically designed for the industrial PC JI-PC501. Third-party parts and equipment are not tested on our part, and are therefore not released by us. The installation of such parts may impair the safety and the proper functioning of the industrial PC JI-PC501.

Any liability on the part of Jetter AG for any damages resulting from the use of non original parts and equipment is excluded.

Repairing and servicing the industrial PC JI-PC501

The industrial PC JI-PC501 must not be repaired by the operator. The industrial PC JI-PC501 does not contain any parts that could be repaired by the operator.
The industrial PC JI-PC501 must be sent to Jetter AG for repair.

The industrial PC JI-PC501 is not maintenance-free. To prevent malfunctions, the fan filter or the device filter shall be replaced at regular intervals. For more information refer to chapter 5: "Avoiding Malfunctions", page 27.

Decommissioning and disposing of the industrial PC JI-PC501

The environmental regulations for the respective country apply to decommissioning and disposing of the industrial PC JI-PC501 on the operating company’s premises.

1.1 Ensure your Own Safety

Warning

- Isolate the industrial PC JI-PC501 from the mains if maintenance works have to be carried out. By doing so, you will prevent accidents resulting from electric voltage.
- Safety and protective devices, e.g. the barrier and cover of the terminal box must never be shunted or by-passed.
- Dismantled safety equipment must be reattached prior to commissioning and checked for proper functioning.
- Prior to commissioning, the machine manufacturer shall conduct a hazard analysis for the machine and take appropriate measures to prevent personal injury and damage to property resulting from accidental movements.

Malfunctions

- Malfunctions or other damages are to be reported to an authorized person immediately.
- Secure the industrial PC JI-PC501 against misuse or accidental use.
- The industrial PC JI-PC501 must not be repaired by the operator.

Information Signs and Labels

- Nameplates, information signs, and labels always have to be observed and kept readable.
- Damaged or unreadable information signs and labels are to be exchanged.

Earthing procedure

- Ground the enclosure according to Fig. 4 on Page 17.

1.2 Notes on Safety as regards the Installation

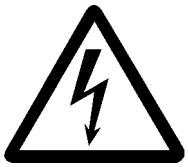

Danger resulting from electric shock!

If the industrial PC JI-PC501 is not isolated from the mains, for example during installation, maintenance and repair, you can get an electric shock.
Please, observe the following instructions on installation and commissioning in order to avoid injuries such as muscle cramps, burns, unconsciousness, respiratory standstill, and possibly death.

Instructions on installation

- Have works on the electric and electronic system performed by qualified personnel only. For more information refer to See “Who is Permitted to operate the industrial PC?” on page 9..
- During installation isolate the industrial PC JI-PC501 from the mains (unplug the mains plug).
- The industrial PC must not rest upon the mains plug. Provide enough room for wiring purposes.
- The mains plug serves as disconnecting device and, as such, must be easily accessible at any time.
- The minimum conductor area of supply lines is 0.75 mm^2.
- The maximum stripping length for supply lines is 7 mm.
- Wiring of the power supply terminal **X1** shall be carried out according to Fig. 1 or Fig. 2.
- Protective earth shall be connected by all means. The mains connection shall provide a proper protective earth (PE) connection.
- The VDE guidelines must be observed
- When installing the device, make sure that the venting slots are not obstructed.

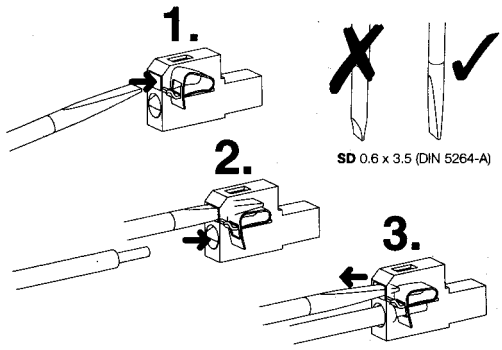

Fig. 1: Wiring of power supply terminal X1 - Option 1

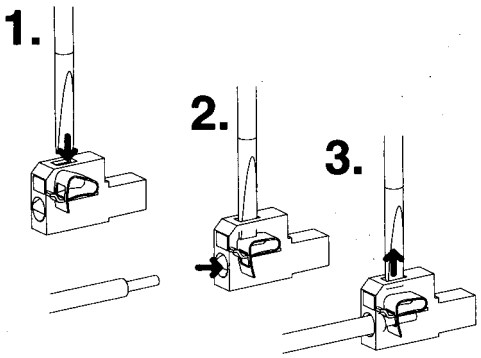

Fig. 2: Wiring of power supply terminal X1 - Option 2

1.3 Notes on Safety as regards Commissioning

Prior to commissioning, please do the following:

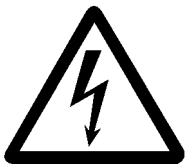

- reattach dismantled protective equipment and check it for proper functioning;
- carry out each commissioning, even a short functional test, with correctly connected PE bus always;
  Failure to do so may result in an electric shock when touching the enclosure.

During Commissioning

- Do not touch any terminals and electric components, especially the power supply terminal **X1**.

  Failure to do so may result in an electric shock.

1.4 Residual Dangers

Hazards during Operation

Hazard caused by high operating voltage!

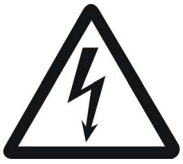

Warning

Extremely hazardous voltages of up to AC 240 V may occur!

Such voltages may result in muscle cramps, burns, unconsciousness, respiratory standstill, or death.

- During operation, keep all cover plates and control cabinet doors closed.
- Do not remove the cover.
- Do not disconnect electrical connections of the industrial PC JI-PC501 while they are under voltage.
- Do not touch any terminals and electric components while the industrial PC JI-PC501 is in operation.

- In particular, do not touch the power supply terminal X1 during operation. The terminals have the following meaning:

  X1: Power supply (mains terminal)

Hazards after POWER is turned OFF

Danger resulting from electric shock!

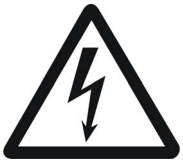

Warning

You can get an electric shock if you don't wait at least 5 minutes after switching off before you continue working with the industrial PC JI-PC501.
Capacitors can still have dangerous voltages present up to five minutes after switching off the supply voltages.

- Wait at least 5 minutes after switching off, before touching live parts or disconnecting terminal leads.

1.5 Instructions on EMI

The noise immunity of a system corresponds to the weakest component of the system. For this reason, correct wiring and shielding of cables is of paramount importantance.

Important !

Measures for increasing immunity to interference:

- Be sure to connect all protective earth terminals of the industrial PC JI-PC501.
  - Connect the protective earth terminal located on the enclosure according to Fig. 4, Page 17.
  - Connect the protective earth (PE) conductor to terminal X1.
- Follow the instructions given in Application Note 016 "EMC-Compatible Installation of the Electric Cabinet" published by Jetter AG.

The following instructions are excerpts from Application Note 016:

- As a rule, physical separation should be maintained between signal and power lines. We recommend spacings greater than 20 cm. Cables and lines should cross each other at an angle of 90°.
- Shield cables on both ends.
- Unshielded wire ends of shielded cables should be as short as possible.
- The entire shield must be drawn behind the isolation, and then be clamped under an earthed strain relief with the greatest possible surface area.

When male connectors are used:

- Only use metallized connectors, e.g. SUB-D with metallized housing. Make sure that the strain relief is directly connected with the housing here as well (see Fig. 3).

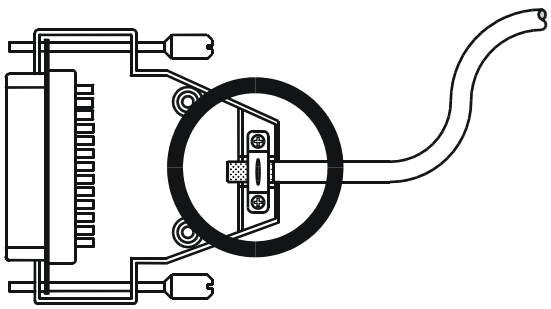

Fig. 3: Shielding of SUB-D connectors in conformity with EMC standards.

Important !

To avoid malfunctions the following must be ensured:

- Adhere to the measures for increasing immunity to interference. Compliance with these measures will also prevent malfunctions.
- To prevent malfunctions, connect the protective earth terminal located on the enclosure according to Fig. 4.

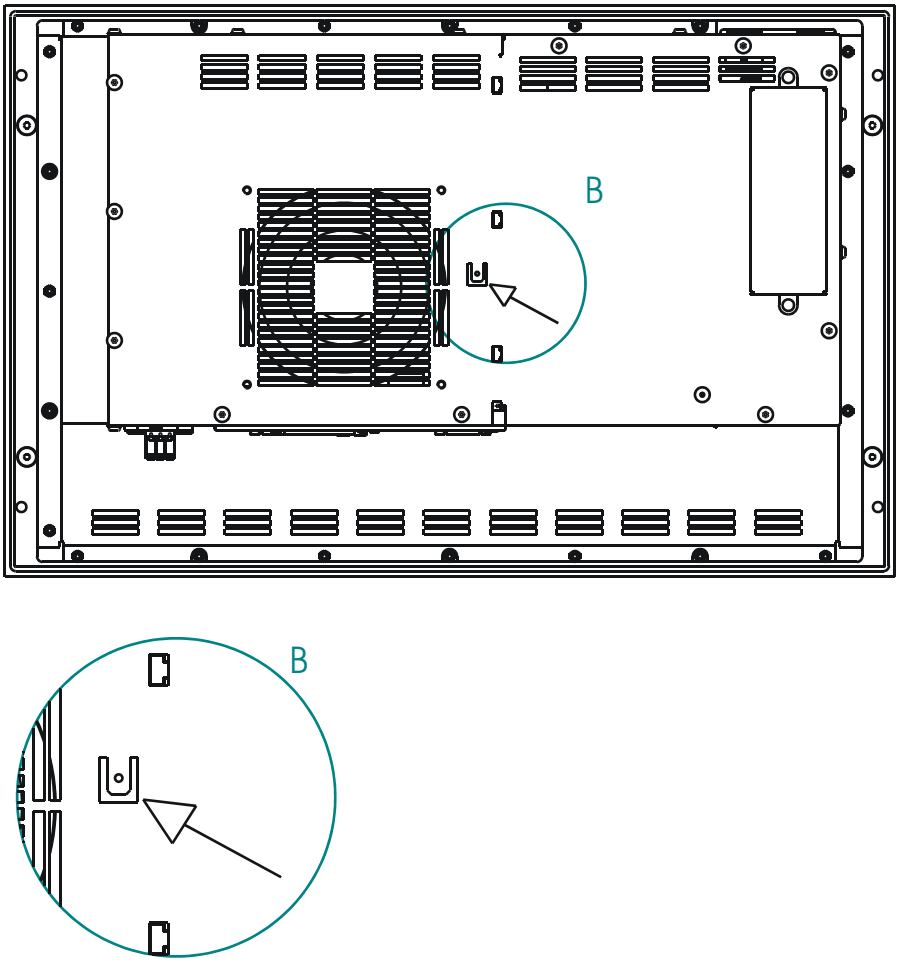

Fig. 4: Earth Connection

2 Physical Dimensions

All dimensions in mm

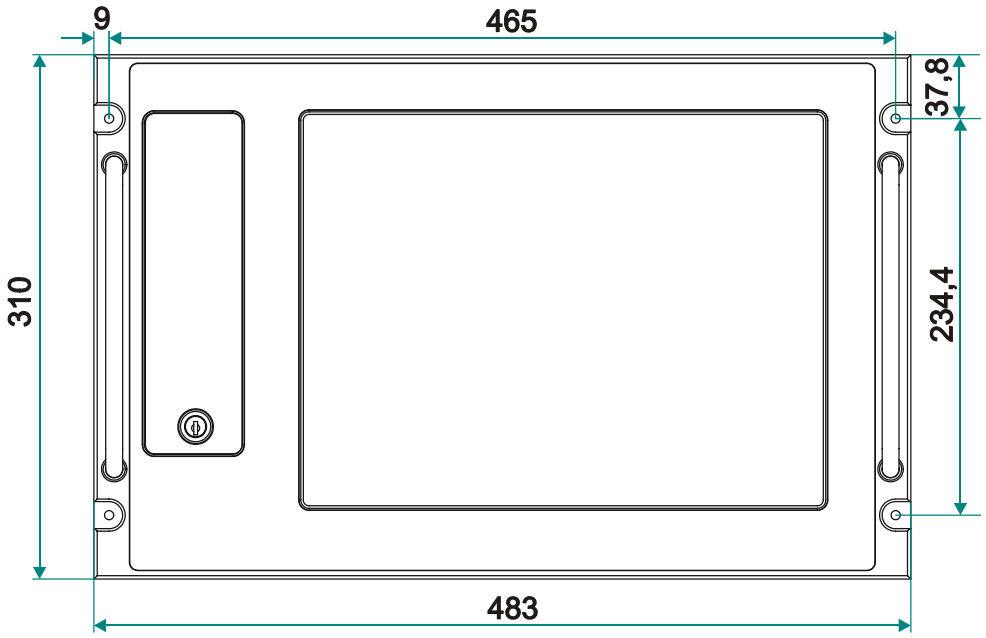

Fig. 5: Front View

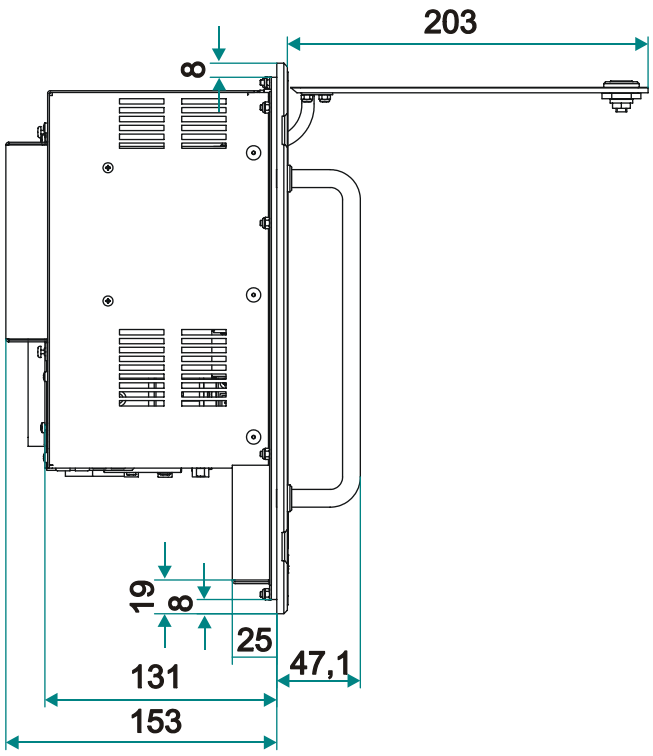

Fig. 6: Side View

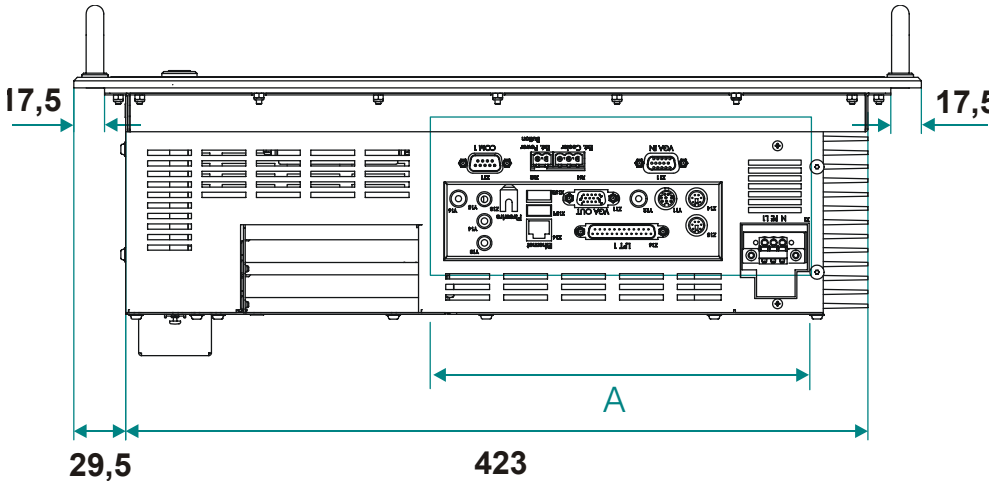

Fig. 7: Bottom View

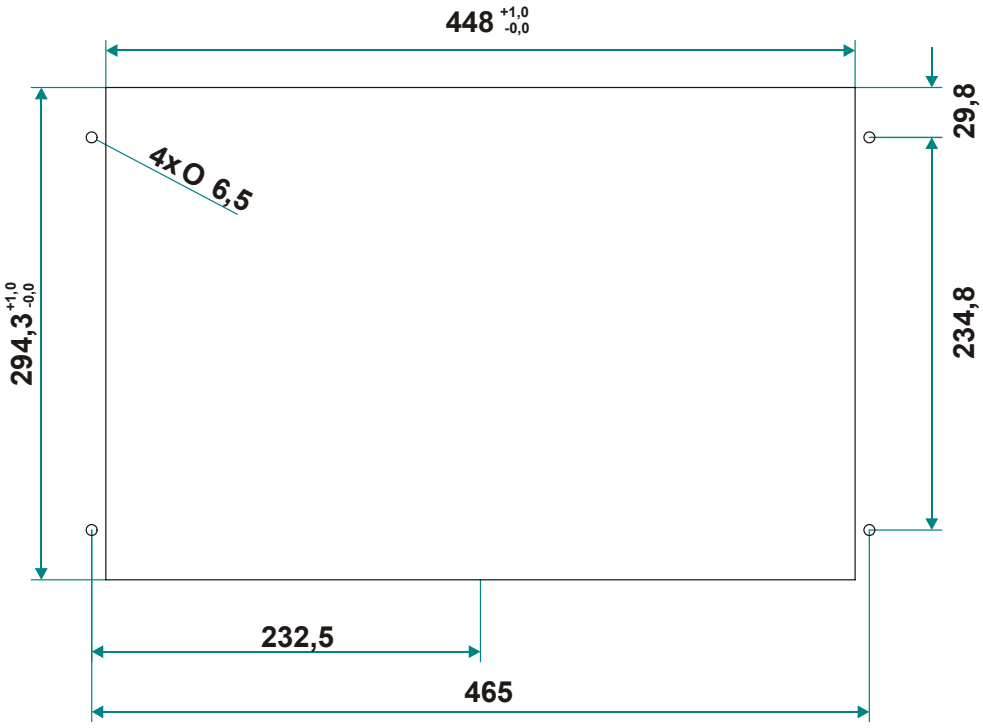

Fig. 8: Panel cutout with hole pattern

3 Operating Parameters

Environmental Operating Parameters		
Parameter	**Value**	**Reference**
Operating temperature range	+5 °C through +40 °C max. 3 K/min (with FDD max. 0.3 K/min)	
Storage temperature range	-25 °C through +70 °C without CD drive/FDD (with CD drive/FDD -22°C up to +60 °C at max. 0.5 K/min)	DIN EN 60068-2-1 DIN EN 60068-2-2
Air Humidity / Humidity Rating	10 % to 90 % without CD drive/ FDD 20 % to 80 % with CD drive/ FDD Non-condensing	DIN IEC 68, Part 2-3
Pollution degree	2	DIN EN 60950
Corrosion immunity/ chemical resistance	No special protection against corrosion. Ambient air must be free from higher concentrations of acids, alcaline solutions, corrosive agents, salts, metal vapours, or other corrosive or electroconductive contaminants	
Atmospheric pressure	max. 2,000 m above sea level	

Mechanical Operating Parameters

Parameter	Value	Reference
Free falls withstanding test	Height of fall (units within packing): 1 m	DIN EN 60068-2-32
Vibration resistance	10 Hz -57 Hz: with an amplitude of 0.0375 mm for continuous operation (peak amplitude of 0.075mm) 57 Hz - 150 Hz: 0.5g constant acceleration for continuous operation (1 g constant acceleration as peak value), 1 octave per minute, 10 frequency sweeps (sinusoidal), all spatial axes	DIN EN 60068-2-6
Shock resistance	5 g occasionally, 11 ms, sinusoidal half-wave, 2 shocks in all three spatial axes	DIN EN 60068-2-27
Degree of protection	IP 65 front end, with gasket and integrated IP 20 rear end	EN 60529
Mounting position with hard disk drive Mounting position with flash memory	Vertically or horizontally with the display pointing upwards 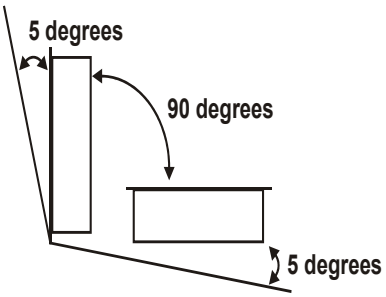 (display pointing upwards)	

Operating Parameters - Electrical Safety

Parameter	Value	Reference
Protection class	I	DIN EN 60950
Dielectric strength / dielectric test voltage (230 V only)	Input - Earth: AC 1500 V, 1 min	DIN EN 60950
Overvoltage category	II	DIN EN 50178

Operating Parameters (EMC) - Emitted Interference		
Parameter	**Value**	**Reference**
Rack	Frequency band 30 to 230 MHz, limit 30 dB (µV/m) at 10 m distance Frequency band 230 to 1000 MHz, limit 37 dB (µV/m) at 10 m distance (class B)	DIN EN 50081-1 DIN EN 55022
Mains AC (230 V only)	Frequency bands 0.15 to 0.5 MHz, limit 66 to 56 dB (µV)* 0.5 to 5 MHz, limit 56 dB (µV)* 5 to 30 MHz, limit 60 dB (µV)* * measured with a quasi peak detector (class B)	DIN EN 50081-1 DIN EN 55022

Operating Parameters - Immunity to Interference (EMC)		
- Enclosure -		
Parameter	**Value**	**Reference**
RF Field, amplitude-modulated	Frequency band 27 -1000 MHz; test signal strength 10 V/m AM 80 % at 1 kHz Criterion A	DIN EN 50082-2 DIN EN 61000-4-3
Electromagnetic RF Field, pulse-modulated	Frequency 900 +/-5 MHz Test field strength 10 V/m 50 % ON period Repetition rate 200 Hz Criterion A	DIN EN 50082-2 DIN EN 61000-4-3
ESD	Discharge through air: Test peak voltage 15 kV (severity level 4) Contact discharge: Test peak voltage 8 kV (severity level 4) Criterion A	DIN EN 50082-2 DIN EN 61000-4-2

Operating Parameters - Immunity to Interference (EMC)		
- Signal, Data, Bus and Mains Cables -		
Parameter	**Value**	**Reference**
Asymmetric RF, amplitude-modulated	Frequency band 0.15 to 80 MHz Test voltage 10 V AM 80 % at 1 kHz Source impedance 150 ohms Criterion A	DIN EN 50082-2 DIN EN 61000-4-6
Burst (fast transients)	Test voltage 2 kV tr/tn 5/50 ns Repetition rate 5 kHz Criterion A	DIN EN 50082-2 DIN EN 61000-4-4

Operating Parameters - Immunity to Interference (EMC)		
- Earth Connection -		
Parameter	**Value**	**Reference**
Asymmetric RF, amplitude-modulated	Frequency band 0.15 to 80 MHz Test voltage 10 V AM 80 % at 1 kHz Source impedance 150 ohms Criterion A	DIN EN 50082-2 DIN EN 61000-4-6

4 Technical Data

General and Mechanical Specification	
Height	310 mm
Width	483 mm
Depth	152.5 mm (without CD drive/FDD 131mm)
Screen Size	305 mm x 230 mm
Weight	approx. 11.5 kg
Keys	Front panel: 1 ATX key, 3 OSD keys

Electrical Specification	
Power Supply	AC 100 V through 240 V, 2 A through 4.5 A, 50 - 60 Hz;
Backup battery	Refer to your motherboard manual
Display	15“ XVGA 1024 x 768 TFT
Backlighting	The brightness can be adjusted through the OSD keys located on the front panel. Brightness: 250 cd/m^2; MTBF 50,000 hours (half-peak brightness) at room temperature and consistent maximum brightness.
Watchdog Timer	20 seconds until timeout (default). Every 15 seconds the watchdog is retriggered by JI-PC501. If this does not happen, the timeout will cause a reset.
Interfaces	RS 232 (COM1) Ethernet 10/100Base-Tx Parallel Port (LPT1) Mouse port PS/2 External keyboard port PS/2 CRT input 1024 x 768 (XGA) CRT output (UXGA) 4 Hi-Speed USB 2.0 ports IEEE1394
Hard disk drive	>20 GB 2.5" HDD, shock-resistant

Electrical Specification	
RAM	256 MB DDR266 SDRAM (up to 1 GByte as an option)
Graphic Memory	64 MB shared with system
Expansion slots	2 PCI slots
Options	• 5-wire analog resistive touch screen, 12 bit resolution • Acoustic wave glas touch screen
Operating System	Windows XP (optional Windows 2000)
CPU fan	Zalman CNPS7000A-AlCu Operating speed = 2,400 RPM +/- 10 %, noise level 25 dB, ball bearing, MTBF = 80,000 hours at 40 °C, MTBF = 130,000 hours at 25 °C

5 Avoiding Malfunctions

Important !

To avoid malfunctions the following must be ensured:

- Clean or replace the air filter on a regular basis.
  Order number: 60865257 (air filter 120 x 120)
- It must be ensured that the air supply is not obstructed.

6 Description of Connections

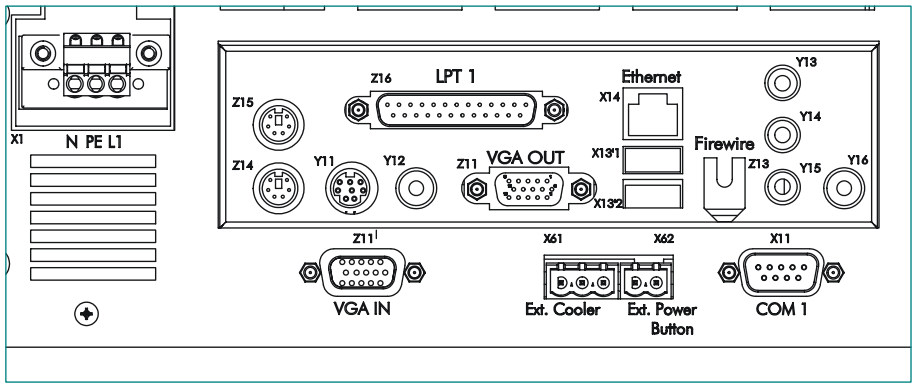

Fig. 9: Connection of section A

X1 Power Supply **3-pin female connector WEIDMÜLLER Omnimate** **Connector color: Orange**	
Pin	**Description**
1	N
2	PE
3	L1
AC 100 V through 240 V, 2 A through 4.5 A, 50 Hz through 60 Hz	

X61 External Fan Terminal **3-pin female COMBICON connector** **Connector color: Green**	
Pin	**Description**
1	GND
2	+12V
3	Fan control

X62 External Power Button **2-pin female COMBICON connector** **Connector color: Green**	
Pin	**Description**
1	Power Button
2	GND
Bridging pin 1 and 2, for example by a PLC output, causes the system to boot or shutdown.!	

X11 COM1 RS232 **9-pin male SUB-D connector**	
Pin	**Description**
1	DCD
2	RXD
3	TXD
4	DTR
5	GND
6	DSR
7	RTS
8	CTS
9	RI

Z16 LPT1 Centronics **25-pin female SUB-D connector**	
Pin	**Description**
1	STROBE#
2	DATA0
3	DATA1
4	DATA2
5	DATA3
6	DATA4
7	DATA5
8	DATA6
9	DATA7
10	ACK
11	BUSY
12	Paper Empty
13	PRN Select
14	A.F.F#
15	ERROR#
16	INIT.
17	LPT Select LN#
18	GND
19	GND
20	GND
21	GND
22	GND
23	GND
24	GND
25	GND

Z11 and Z11' VGA / CRT **15-pin male SUB-D connector VGA OUT** **15-pin male SUB-D connector VGA IN**	
Pin	**Description**
1	RED
2	GREEN
3	BLUE
4	NC
5	GND
6	GND
7	GND
8	GND
9	NC
10	GND
11	NC
12	NC
13	HSYNC
14	VSYNC
15	NC

X14 Ethernet 10/100BASE-Tx **RJ45**	
Pin	**Description**
1	TX+
2	TX-
3	RX+
4	NC
5	NC
6	RX-
7	NC
8	NC

Z14 Keyboard **6-pin miniature DIN Jack**	
Pin	**Description**
1	KBDAT
2	NC
3	GND
4	+5V
5	KBCLK
6	NC

Z15 PS/2 Mouse 6-pin miniature DIN Jack (this connection is not available with touch screens)	
Pin	**Description**
1	MDAT
2	MDAT
3	GND
4	+5V
5	MCLK
6	MCLK

Miscellaneous	
Connection	**Description**
X13‘1	USB 2.0
X13‘2	USB 2.0
Y11	S-Video TV-out
Y12	AV TV-out (RCA Jack)
Y13	Red: Center / Mic-in
Y14	Blue: Rear / Line-in
Y15	Green: Front / Line-out
Y16	S/P DIF Digital Audio
Z13	Firewire IEEE1394

Appendix A: Recent Revisions

No revisions, since this is the first issue of the installation manual.

Chapter	Comment	Revised	Added	Deleted

Appendix B: List of Abbreviations

AC	**A**lternating **C**urrent
ATX	**A**dvanced **T**echnologie E**x**tended
CE	**C**ommunautés **E**uropéennes European Union
CD/FDD	**C**ompact **d**isk / **F**loppy **d**isk **d**rive
COM	**COM**unication; Device name for a serial port in Wintel systems. The first serial port is identified as COM1, the second as COM2, etc.
DC	**D**irect **C**urrent
DIN	**D**eutsches **I**nstitut für **N**ormung e.V. = German Industry Standard
EU	**E**uropean**U**nion
EMI	**E**lectro **M**agnetic **C**ompatibility
EN	**E**uropäische **N**orm, that is: European Standard
GND	**G**rou**nd** = Ground, Earth
IEC	**I**nternational **E**lectrotechnical **C**ommission
IEEE	**I**nstitute of **E**lectrical and **E**lectronics **E**ngineers
IP	**I**nternational **P**rotection
LPT	**L**ine **P**rin**t**er; Logical device name for a line printer. This name is reserved by the MS-DOS operating system for up to three parallel printer ports designated LPT1, LPT2, and LPT3.
MTBF	**M**ean **T**ime **B**etween **F**ailures
NC	**n**ot **c**onnected
OSD	**O**n **S**creen **D**isplay
PCI	**P**eripheral **C**omponent **I**nterconnect bus
PE	**P**rotective **E**arth
SUB-D	Type name of a plug-in connector
TFT	**T**hin **f**ilm **t**ransistor
tr	Rise time of burst
tn	Nominal time of burst
USB	**U**niversal **s**erial **b**us
VGA	640 x 480 resolution

VDE	**V**erband **d**eutscher **E**lektrotechniker e.V. = Association of German Electrical Engineers
XGA	1028 x 768 resolution
SXGA	1280 x 1024 resolution

Units:

A	Ampere (electric current)
dB	Dezibel
cd/m²	candela per m²
g	gram
kg	Kilogram (1 kg = 10^3 g)
Hz	Hertz
GHz	Gigahertz (1 GHz = 10^9 Hz)
MHz	Megahertz (1 MHz = 10^6 Hz)
K	Kelvin
m	Meter
cm	Centimeter (1 cm = 10^{-2} m)
mm	Millimeter
mm^2	square millimeter
min	Minute
Nm	Newtonmeter
RPM	Revolutions Per Minute
s	second
ns	Nanosecond (1 ns = 10^{-9} s)
V	Volt (electric voltage)
µV	Microvolt (1 µV = 10^{-6} V)
°	Degree
°C	degrees centigrade (temperature unit)
%	per cent

Appendix C: List of Illustrations

Fig. 1:	Wiring of power supply terminal X1 - Option 1	13
Fig. 2:	Wiring of power supply terminal X1 - Option 2	13
Fig. 3:	Shielding of SUB-D connectors in conformity with EMC standards.	16
Fig. 4:	Earth Connection	17
Fig. 5:	Front View	19
Fig. 6:	Side View	19
Fig. 7:	Bottom View	20
Fig. 8:	Panel cutout with hole pattern	20
Fig. 9:	Connection of section A	29

Appendix D: Index

C

Connection
- COM1 RS232 (X11) 30
- Ethernet 10/100 BASE-Tx (X14) 33
- External fan terminal (X61) 29
- External Power Button (X62) 30
- Keyboard (Z14) 33
- LPT1 Centronics (Z16) 31
- Power Supply (X1) 29
- PS/2 Mouse (Z15) 34
- VGA / CRT (Z11) 32

D

Description of Symbols 5

E

Electrical Specification 25

I

Information Signs 12

M

Maintenance 10
Malfunction 17, 27
Malfunctions 11
Mechanical Specification 25
Modifications 10

N

Noise immunity 16

R

Repair 10

U

Usage as Agreed Upon 9
Usage Other than Agreed Upon 9

Jetter AG

Gräterstraße 2
D-71642 Ludwigsburg

Germany

Phone: +49 7141 2550-0
Phone - Sales: +49 7141 2550-433
Fax - Sales: +49 7141 2550-484
Hotline: +49 7141 2550-444
Internet: http://www.jetter.de
E-Mail: sales@jetter.de

Jetter Subsidiaries

Jetter Asia Pte. Ltd.

32 Ang Mo Kio Industrial Park 2
#05-02 Sing Industrial Complex
Singapore 569510

Singapore

Phone: +65 6483 8200
Fax: +65 6483 3881
E-Mail: sales@jetter.com.sg
Internet: http://www.jetter.com.sg

Jetter (Switzerland) AG

Münchwilerstraße 19
CH-9554 Tägerschen

Switzerland

Phone: +41 719 1879-50
Fax: +41 719 1879-69
E-Mail: info@jetterag.ch
Internet: http://www.jetterag.ch

Jetter USA Inc.

165 Ken Mar Industrial Parkway
Broadview Heights
OH 44147-2950

U.S.A.

Phone: +1 440 8380860
Fax: +1 440 8380861
E-Mail: bschulze@jetterus.com
Internet: http://www.jetterus.com