JetMove 1005
Servo amplifiers

Short description

The servo amplifiers JetMove 1005 and JetMove 1008 control motors from DC 24 ... 48 V up to max. 384 Watt. They can be connected to Jetter controllers via EtherCAT® and CANopen® - no matter whether they are equipped with or without encoders.

Features

- Compact design
- High positioning accuracy and quality of control
- Integrated safety technology (S1)
- Digital encoder interfaces for 1-cable technology (TD)
- Simple commissioning
- Quick installation and cabling

Options

- CANopen® (I4)
- TD - HIPERFACE DSL® (TD)
- LinMot® encoder (TL)
- Analog output +/-10 V (T6)

Application in many sectors, such as

- Packaging and filling
- Mounting and handling
- Glass and window building machines

A great number of features with Jetter JC ... MC

- Electronic gearbox
- Dynamically changeable cam discs
- Synchronizing of position and velocity
- Print-mark correction
- Winding function
- Flying saw
- Cross cutter
- Torque / force control

Motor and encoder types

- Synchronous and asynchronous motors
- direct drives, linear motors
- BLDC, DC motors
- 2-phase stepper motors
- Resolver, incremental encoder, hall sensor (digital)
- HIPERFACE DSL®; LinMot®

JM-1005

Technical Data

	JetMove 1005
Cycle times for current, speed and position feedback control	62.5 µs, 125 µs, 250 µs
Controller interfaces	EtherCAT® or CANopen®
Diagnostics / status display of device and bus	via colored LEDs
CANopen® address settings and bus termination	via address and DIP switch
Motor types	Synchronous and asynchronous motors, direct drives, linear motors, BLDC, DC, 2-phase stepper motors
Encoder types - Basics	Resolver; Incremental encoder (RS-422 500 kHz max., or sin/cos 1 Vpp 100 kHz max, 5 V Udc)
Optional encoders	HIPERFACE DSL®; LinMot®
Thermal sensor, shutdown	Switch, PTC, KTY83-110, KTY84-130, PT-1000; I2t-shutdown
Digital inputs	4, DC 24 V, 5 mA, to be freely configured, reaction time 250 µs
Analog inputs	2, -10 … +10 V, 12 bits, 1 ms sampling interval
STO input	2, DC 24 V, 5 mA + 1 feedback relay (< 100 mA), Kat 3, PL "e"
Brake output	1 relay, DC 24 V max., 500 mA (semiconductor)
Ballast resistor	Option: external
Supply voltage - logic circuit	DC 24 V (±20 %), 300 mA
Supply voltage - power circuit	DC 24 … 48 V (±20 %), 10 Ampere max.
Rated current [A] at 16 kHz	5
Peak current [A] 16 kHz for a max. period of 8 seconds	10
Continuous power [kW]	0.24
Weight [kg]	0.4
Dimensions [H x W x D] in mm	26 x 142 x 95
Color (front) and housing	Steel plate, galvanized
EMC directive	EMC Directive 2014/30/EU
Approvals	CE
Conformity to RoHS	Yes
Degree of protection	IP20
Height of installation	Operation: 1,000 m max., higher upon request
Shock/vibration – transport	2M2 to EN 60721-3-2: 1997
Vibration during operation	Sinusoidal oscillations, 10 ... 57 Hz: 0.075 mm amplitude, 57 ... 150 Hz: Acceleration 1 g
Ambient temperature - operation / transport (storage)	0 °C ... +40 °C / -25 °C ... +70 °C (+55 °C)
Ambient air humidity - operation / transport (warehouse)	5 %... 85 %, non-condensing / 5 % ... 95 %, non-condensing
Maximum storage period	1 year without restrictions

Further details and order information are available on request. Specifications are subject to change without notice. Errors and omissions excepted.

Ordering information

60882066_00 - EtherCAT® basic design
60882067_00 - EtherCAT® + option TD
60882071_00 - CANopen® basic design
60882072_00 - CANopen® + option TD

Dimensional drawing

Front and side view JM-1005 | 1008

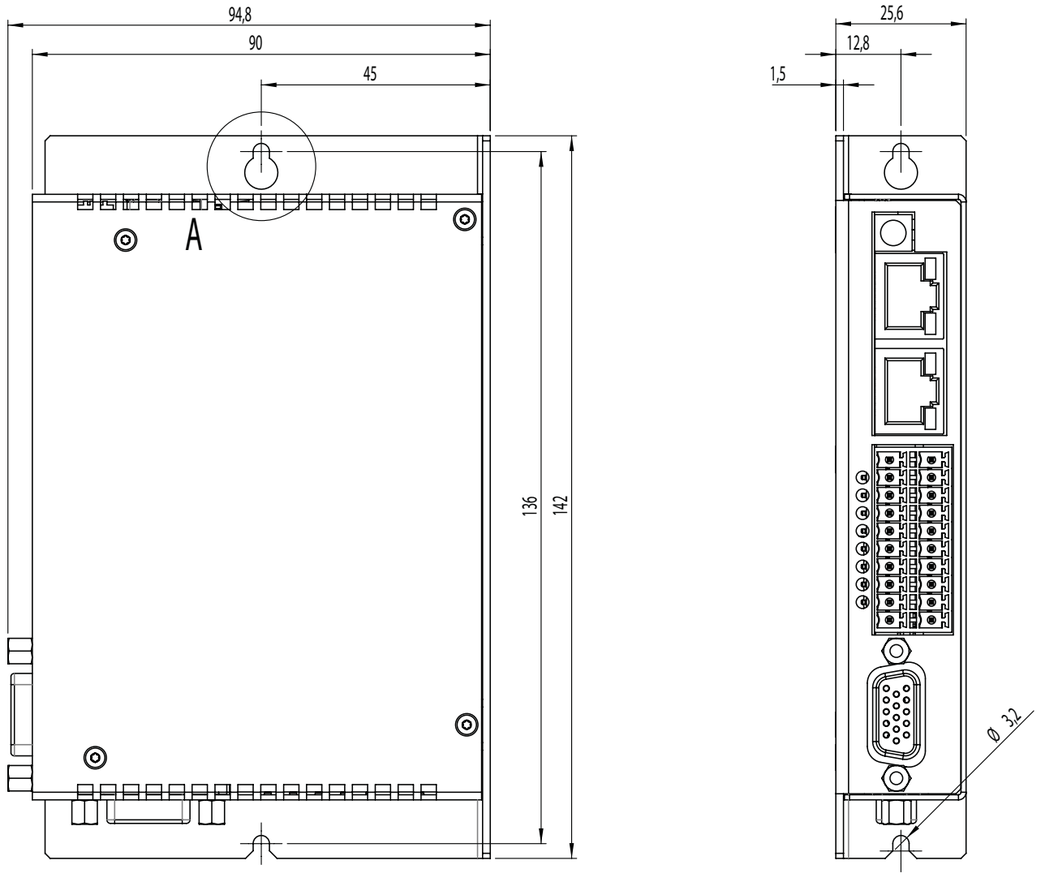

System overview JM-1005 | 1008

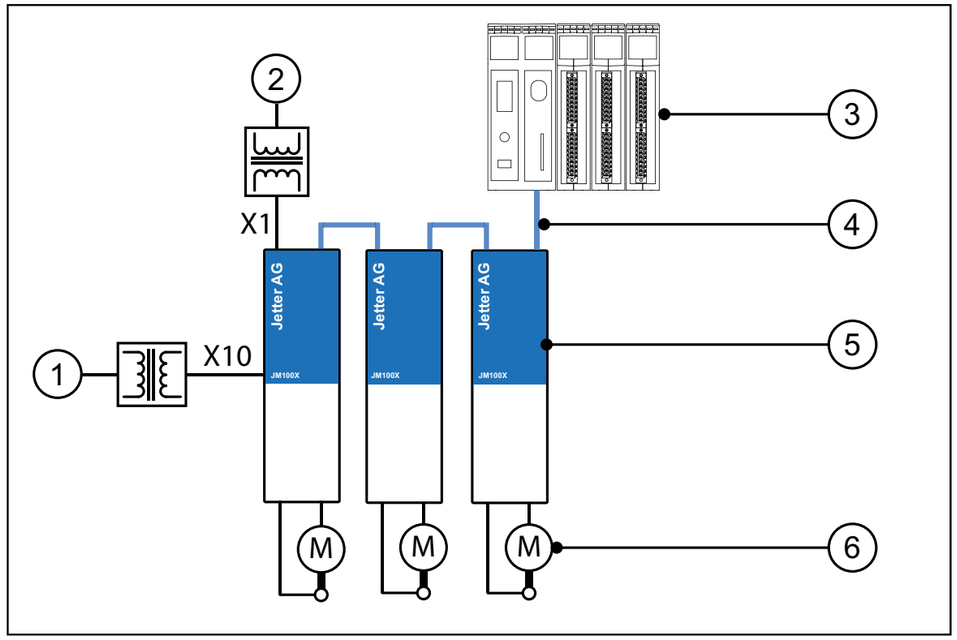

1	PELV / SELV DC 24 V	4	Bus interfaces
2	PELV / SELV DC 12 … 48 V	5	Servo amplifiers
3	Controllers	6	Motor with encoder

Mounting / cooling / pollution

Mounting	on a grounded and conductive panel which must not be painted
Cooling	Passive (natural convection)
Mounting orientation	Vertical (power and motor connector (X1) must point downwards)
Clearance	≥ 25 mm above, below, and lateral
Allowed pollution	Pollution degree 2 to EN 61800-5-1 (To avoid conductive pollution, the device must, e.g. be installed in a control cabinet to IP54)

Jetter AG | Gräterstraße 2 | 71642 Ludwigsburg | Germany
Tel +49 7141 2550-0 | Fax +49 7141 2550-425 | info@jetter.de | www.jetter.de