JX2-SM1D

Stepper Motor Control

Operating Instructions

Jetter AG
Gräterstraße 2

D-71642 Ludwigsburg
Tel. +49 7141 2550 0
Fax +49 7141 2550 425
Hotline +49 7141 2550 444
E-Mail jetter@jetter.de
Internet www.jetter.de

Art. # 608 632 87

January 2003, Printed in Germany

Edition 2.0
January 2003

This operating instruction refers to the following JX2-SM1D stepper motor control:

Type: _____

Serial No.: _____

Construction Year: _____

Order No.: _____

To be filled in by the customer:

Inventory No.: _____

Location of Installation: _____

TABLE OF CONTENTS

1 Note on the Operating Instructions

1.1 Significance

This operating instruction is part of the JX2-SM1D module, and

- it must always, that is, until disposal of the JX2-SM1D module, be kept ready to hand.
- in case of sale, alienation or lending of the JX2-SM1D module, it must be passed on as well.

Please do by all means contact the manufacturer, if you do not clearly understand anything written in the operating instruction. We would appreciate any comments or contributions on your part and would ask you to send them to us. This way you will enable us to make the manuals still more user friendly and to meet your wishes and requirements.

There will remain unavoidable dangers for persons and assets in this JX2-SM1D module.
For this reason, every person working at this machine, whoever is occupied with transporting, mounting, operation, maintenance and repairing of the JX2-SM1D module, must have been instructed and has to know the possible dangers.
Thus, the operating instruction and especially the safety precautions must be carefully read, understood and followed.
Missing or inadequate knowledge of the operating instruction will lead to the loss of any claim of liability.
Therefore the operating company is recommended to have the instruction of the persons concerned confirmed in written form.

Maintenance of the JX2-SM1D module

The JX2-SM1D module is maintenance-free. This means that no routine servicing will be needed for continuous usage.

Putting the JX2-SM1D module out of operation

For putting the JX2-SM1D module out of operation and for disposing it, the environmental laws of the respective company location will be valid.

1.2 Symbols Used in the Operating Instruction

Danger

This sign is to indicate a possible impending danger of serious physical damage or death.

Caution

This sign is to indicate a possible impending danger of light physical damage. This sign is also to warn you of material damage.

Important

This sign is to indicate a possible impending situation which might bring damage to the product or to its surrounding conditions.

Note

You will be informed of various possible applications and will receive further useful suggestions.

• / -

Enumerations are marked by full stops, strokes or scores.

➢

Operating instructions are marked by this arrow.

➪

Automatically running processes or results to be achieved are marked by this arrow.

[D]

Illustration of PC and user interface keys.

1.3 About this Manual

In the operating instructions, various ways of using the JX2-SM1D module will be described, in order to assist you in designing the stepper motor that is best for your application.

Making use of the possibilities offered by the stepper motor and of the resulting dimensioning of a drive, comparatively detailed knowledge of its characteristics, especially of its controlling, will be required.
Thus, motion and performance of a stepper motor are dependent on its controlling to a great degree, both in performance and in creating of a step frequency.
Faulty dimensioning of a stepper motor drive will normally result in an over-dimensioned, that is, too expensive a system, or else the required performance will not be achieved, or in borderline cases, malfunctioning will occur sporadically.
In order to get a reliable system, knowledge of the load to be driven and of further elements that are part of the process, will be needed by all means.

The characteristics of the JX2-SM1D module have been designed in a way that is apt for many applications.

The JX2-SM1D module can be connected as a module via the system bus of controller.
The advantages of the plain text programming language SYMPAS, especially the "POSITION" and "AXARR" instructions can be made use of. Positioning is automatically controlled and monitored by the JX2-SM1D module, while other tasks can be carried out by the controller.

2 Safety Instructions

2.1 General Safety Instructions

The JX2-SM1D module corresponds to the latest developments in technique. This JX2-SM1D module corresponds to the ruling security enactments and standards.
Special importance has been attached to the operator´s security.

The following standards apply to the operator:

- the appropriate accident prevention standards
- the generally acknowledged safety standards
- EC guidelines or other country-specific regulations.

Appropriate Usage

The JX2-SM1D module is used as a drive of 2-phase stepper motors of an up to 5 A rated phase current. The motor operation voltage ranges from 24 V to 70 V DC.
The supply voltage of the module is 24V DC. The operating voltage of the JX2-SM1D module belongs to the SELV (safety extra low voltage) category, which means it does not belong to the German standard of "Niederspannungsrichtlinie". An axis consists of the stepper motor control and the motor.

The JX2-SM1D module may only be used inside the limits given in its technical data.

This sign is to indicate a possible impending situation which might bring damage to the product or to its surrounding conditions.

Important!

- Safety devices that have been dismounted must be fixed again and checked for proper functioning.

- Safety and security devices that have been installed by the manufacturer, as, for example, the extra set of limit switches, must under no circumstances be bridged or bypassed.

- Do not connect to the JX2-SM1D module any higher operating voltage than the permitted one.

Inappropriate Usage

Do not use the JX2-SM1D module, in technical systems, for which high failure safety has been laid down, as, for example, in cable cars or aeroplanes.

If the JX2-SM1D module, is to be run under surrounding conditions, which differ from the conditions mentioned in chapter "General Technical Data", the manufacturer is to be contacted beforehand.

Who is Permitted to Operate the JX2-SM1D module?

Only instructed, trained and authorised persons are permitted to operate the JX2-SM1D module.
Mounting, backfitting and maintenance may only be carried out by specially trained personnel, as specific know-how will be required.

- Separate the JX2-SM1D module from the power supply (unplug the connector) before fixing the controller.

Rebuilding and Changing the Device

Important!

For safety reasons no rebuilding or changes of the JX2-SM1D module and its function must be carried out.
Rebuilding and changing of the device without the permission of the Jetter AG results in the loss of any liability claims towards the Jetter AG.

The original parts have been built for this JX2-SM1D module, specifically.
Parts and equipment made by any other manufacturer have not been approved by the Jetter AG and have therefore not been released. Installing these parts in the JX2-SM1D module, or using these parts to extend the device, both safety and functioning of the JX2-SM1D module, will be affected.

Jetter AG shall not be liable for damages, which have been caused by non-original parts and equipment.

Failures

- Failures or other damages have got to be reported to an authorised person immediately.
  In case of failure or damage, keep the JX2-SM1D module from improper or inadvertent use.

Only qualified experts are allowed to carry out repairs.

Information Signs and Labels

- In any case observe information signs and labels and keep them readable.

- Damaged or unreadable information signs and labels must be exchanged.

2.2 Instructions on EMC

The noise immunity of a system corresponds to the noise immunity of the weakest component of the system.

For this reason correct wiring and shielding is important for noise immunity.

Important!

Measures for increasing noise immunity in control systems:

- Shield both sides of the cable.
- The entire shield must be drawn behind the isolation and then extensively clamped under a strain relief.

When male connectors are used:

- Only use metallised connectors, e.g. SUB-D with metallised housings. Please see to it, that here the strain relief is also directly connected with the housing (see Figure 1).

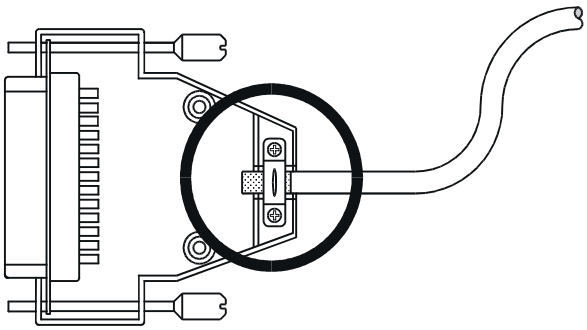

Figure 1: Shield connection for sub-D male connectors in agreement with EMC

If the JX2-SM1D module is indirectly connected to another module via system bus cable:

- Screw on the system bus connections on both ends. Please use the supplied bolts for this purpose.

When the signals are connected to terminals:

- Connect the strain relief directly and extensively with the earthed area (see Figure 2).
- On principle, separate signal and voltage connections spatially.

Important!

How to prevent malfunction:

Correct assembling of motor cables

- Shielding must be clamped extensively under the tightening screws (see Figure 2).
- Connect the shield with the conductive metal rail (see Figure 2)
- Distance "L" between the wire ends and the shielding is to be limited to 8 cm max. (see Figure 2)
- Over the wire ends that have not been shielded, a hinged ferrite is to be mounted. Each of the five cables are to be passed through the ferrite (not to be wrapped; see Figure 2). Please mind carefully to keep the hinged ferrite latched and make sure no cable has got caught.
- The power supply of the motor operation voltage (DC POWER) is to be designed according to the requirements stated in chapter 5.

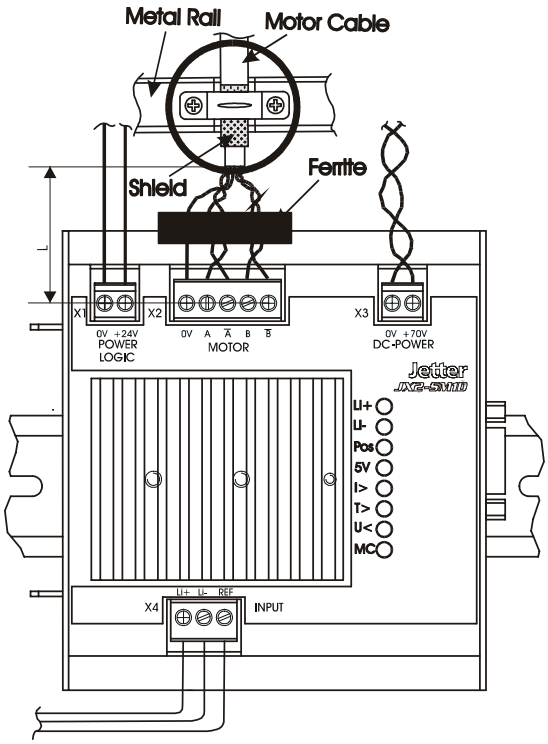

Figure 2: Shielding connection of the motor cable according to EMC

- Place the motor wires at the other end of the cable on a terminal.
  Ground this terminal by connecting it with the conductive motor housing.
  Place the shield on this grounded point.

Connection of the power supply for the motor operation voltage:

- Twist feed and return line.

in general:

- A de-centralised group of expansion modules must always be started with a JX2-PS1 module.

2.3 Remaining Dangers

2.3.1 During Operation

Danger of Burning!

Do neither touch the dissipator nor the housing of the JX2-SM1D module, as temperatures of up to 80 °C can be reached.

Danger of Mechanic Force!

Failure respectively malfunction of the JX2-SM1D module can lead to danger of life or damaging the device, depending on the system, as a stepper motor is driven by the stepper motor control, which is moving mechanic parts or sharp edges.
This should be prevented by building in additional safety devices, which are, for example, another set of limit switches for cutting off the power supply of the motor.
Another safety device is a protective cover.

3 Mechanic Dimensions

3.1 Front View

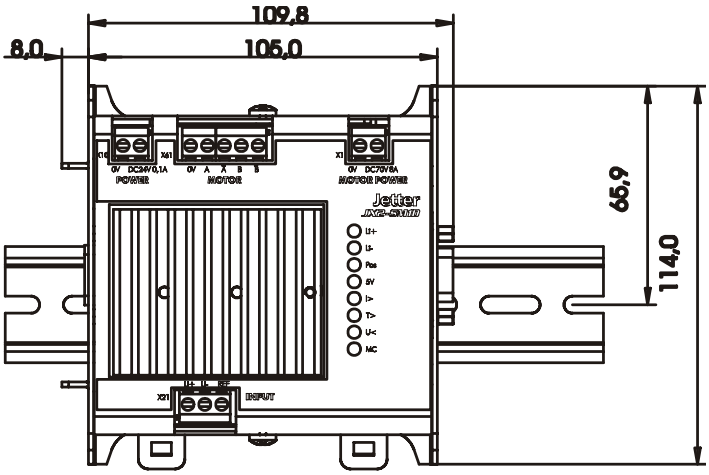

3.2 Side View

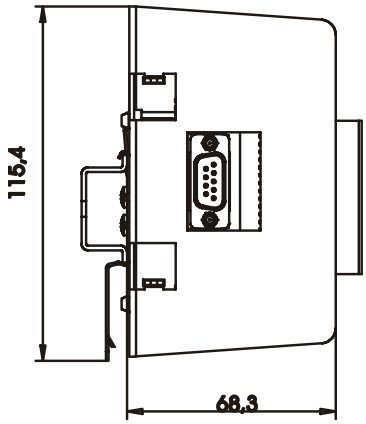

3.3 Top View

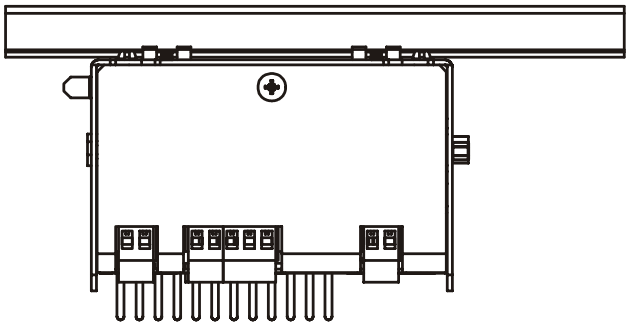

Type of the JX2-SM1D module	
Connection to the basic device via system bus	Male connector SUB-D 9-pin
Dimensions (H x W x D in mm)	114 x 105 x 80
Housing	Aluminium, black, powder coated
Mass	470 g
Mounting	DIN - rail

4 Technical Data

Functional Data	
Positioning range	-8388608 to +8388607 steps
Step frequency	25 kHz maximum
Start / Deceleration ramp	linear with programmable gradient (1 ... 32767Hz / 4ms)
Start / Stop frequency	1 ... 5000 Hz
Step resolution	1/2, 1/4, 1/8 and 1/16 step
Speed at 25 kHz step frequency	1/2 step: 3750 rpm 1/4 step: 1875 rpm 1/8 step: 937 rpm 1/16 step: 468 rpm
Reference run	The maximum step frequency is 1000 Hz The home sensor will be queried every 500 µsec. At step frequencies > 1000 Hz the reference point cannot be recognised in a one-step accuracy any more.
Current lowering in standstill	Lowering time and current are programmable
Hardware recognition	- Over-temperature of the amplifier - Short circuit between motor phases and ground-phase. - Under-voltage of the motor voltage supply - Break of motor cable

Electric Data	
Motor operation voltage	24 V ... 70 V DC
Power supply motor operation voltage: Voltage: Current: Filter condenser:	unstabilised is sufficient 24 V ... 70 V ± 15 % 8 A min. 4700 µF, 100 V, low ESR
Power supply for logic voltage supply	20 V ... 30 V DC / 5 W remaining ripple < 5% sifted
Home sensor (REF), limit switch positive (L+) and negative (L-)	20 V ... 30 V DC /2,8 kΩ internal GND relation: Cl. X1/0V NCC or NOC is possible delay app. 3 ms
Amplifier type	bipolar
Power dissipation P_V logic	< 2 W

Surrounding conditions	
Surrounding temperature	Operation: 0 °C to +50 °C Storage: -10 °C to +70 °C
Max. dissipating temperature	80 °C
Relative air humidity	5 to 95%, non-condensing RH2 according to IEC 61131-2
Protective system	IP 20
Category of protection	III according to IEC 61131-2
Contamination level	II according to IEC 61131-2
EMC resistance	is maintained, if required filtering and shielding is guaranteed: Interference: according to EN 61000-4-2 intensity class 3 EN 61000-4-4 intensity class 4 EN 61000-4-6 intensity class 6 Noise broadcast according to EN 55011 Gr. 1, Cl. B
Installation	position: vertical convection from bottom to top must be possible (radiator ribs) up

Surrounding conditions	
	to 1000 m above sea level (otherwise, power reduction will be necessary)
Oscillating resistance	according to IEC 1131-2 and IEC 68 Part 2-6

5 Motor Operation Voltage

The design of the power supply for the motor operation voltage is shown below.

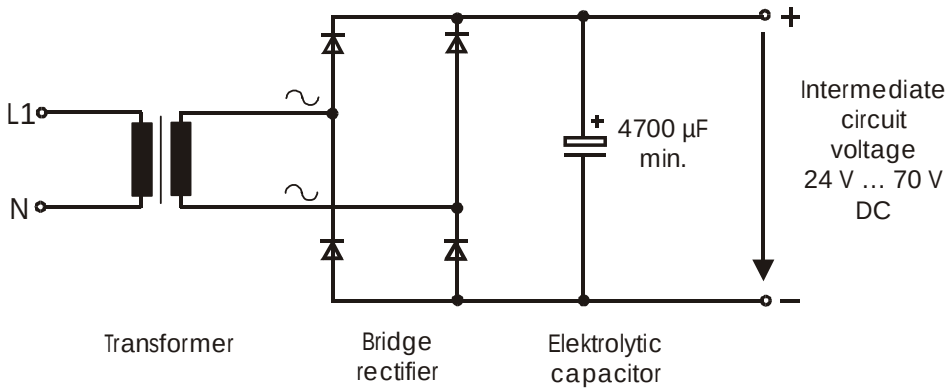

Figure 3: Design of the power supply for the motor operation voltage

Filter

The stepper motor is controlled by a constant current. Thus, the ripple of the motor operation voltage is not decisive for the function of the drive. For smoothing the voltage, the circuit shown in

Figure 3 will be sufficient.

Charging Capacitor

The charging capacitor must be able to stand a high alternating current load. Electrolytic capacitors for switching power supplies meet this requirement.

Feeding

Strong pulse-like currents of short rise times are flowing between amplifier and loading capacitor.
Every feed line consists of an ohmic and an inductive component. If these values are too high, the buffer function of the charging capacitor will be jeopardised.
⇨ Blocking capacitors will be thermally overloaded.
⇨ The controller board are destroyed by peak voltages.

Thus, the following demands will be made on the feed line:

- sufficiently great diameter (≥ 1,5 mm^2)
- reduced inductivity by twisting

6 Description of the LED's

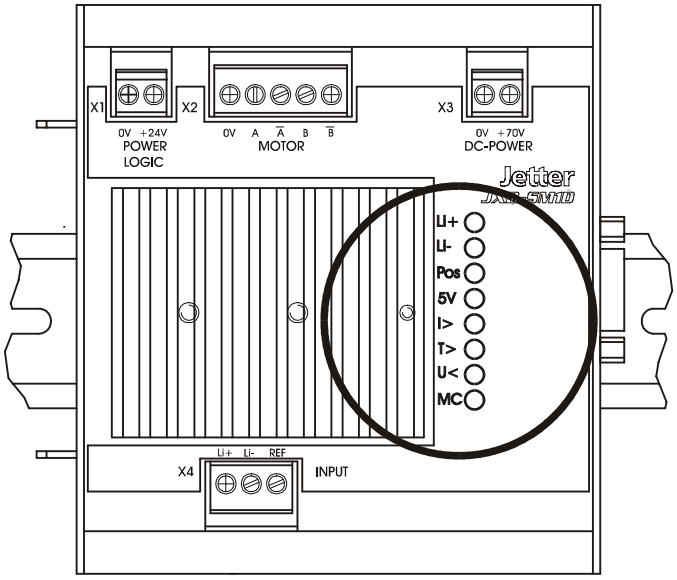

Figure 4: LED's of the JX2-SM1D stepper motor control

The LED´s of the JX2-SM1D module	
Name	**Function**
Li+	Positive limit switch is or was active **ON:** Axis is positioned on the limit switch **flashing regularly:** The limit switch has been recognised by the axis, but the axis is not positioned on the limit switch any more **flashing irregularly:** The software limit switch has been recognised by the axis
Li-	The negative limit switch is or was active **ON:** Axis is positioned on the limit

The LED´s of the JX2-SM1D module	
Name	**Function**
	switch **flashing regularly:** The limit switch has been recognised by the axis, but the axis is not positioned on the limit switch any more **flashing irregularly:** The software limit switch has been recognised by the axis
Pos	AXARR status **ON:** Axis has been positioned
5 V	Module current supply is ok
I >	Short circuit of a motor cable against another one or against ground
T >	Overtemperature of the module (dissipator temp. > 80 °C)
U <	Intermediate circuit voltage (at X3) < 24V (operating voltage of the motor) or: the internal voltage control is faulty
MC	**ON:** The motor cable is faulty. One or both motor phases have not been connected or have been interrupted (is only recognised, if the amplifier is deactivated) **flashing:** during operating system update

7 Description of Connections

Module Power Supply		
Terminal X1 (POWER LOGIC)	**Signal**	**Remarks**
0 V	GND	is set to ground potential
+24 V	24 V	

Motor Connection		
Connection on the JX2-SM1D	**Shielding**	**Specification Maximum Length**
5-pin terminal screw	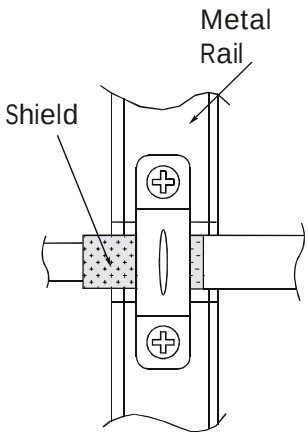 Shield extensively on both sides!	maximum cable length: 50 m cable type: 1 + (2 x 2) x 1,5 mm^2 twist feeding and return line per phase
Terminal X2 (MOTOR)	**Signal**	**Remarks**
0 V	GND	set on ground potential
A	motor phase 1 (+)	feeding line
-A	motor phase 1 (-)	return line
B	motor phase 2 (+)	feeding line
-B	motor phase 2 (-)	return line

Motor Operation Voltage

Connection on the JX2-SM1D	Shielding	Specification Maximum Length
2-pin terminal screw	twisted -> low inductivity no shielding	maximum cable diameter: ≥ 1,5 mm^2
Terminal X3 (DC-POWER)	**Signal**	**Remarks**
0 V	GND	set on ground potential
+70 V	intermediate circuit voltage	value: 24 to 70 V

Controller Inputs		
Terminal X4 (INPUT)	**Signal**	**Signal Voltage (Connection to GND: Terminal X1/0V) / Input Resistance**
Li+	positive limit switch	24V DC / 2,8kΩ
Li-	negative limit switch	24V DC / 2,8kΩ
REF	home sensor	24V DC / 2,8kΩ

8 Wiring Diagram

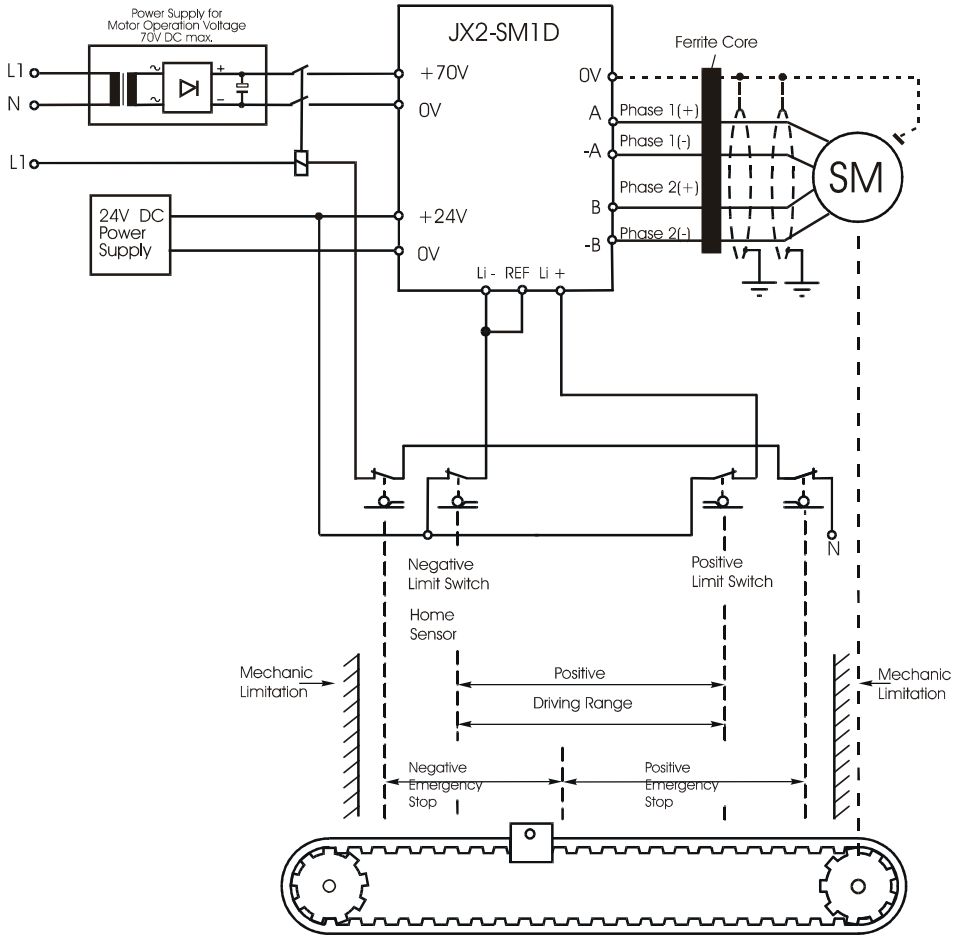

Figure 5: Wiring diagram of the JX2-SM1D module

9 Interesting Facts on Stepper Motor Controls

9.1 What is a Stepper Motor?

A stepper motor is an electric motor, which, as most other electric motors, consists of a stator and a rotor. The rotor normally consists of two low-retentive, toothed pole shoes with permanent magnets in between. The stator also consists of low-retentive, toothed metal sheets; it contains the coils.

Due to direct supply of the coils (phases, see Figure 6), the north and south poles of the stator keep moving on, taking the rotor with them (see Figure 7).

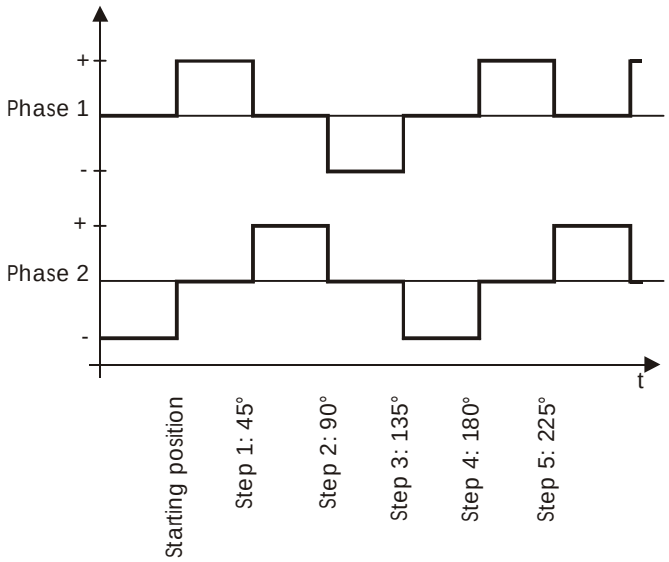

Figure 6: Feeding the metal coils

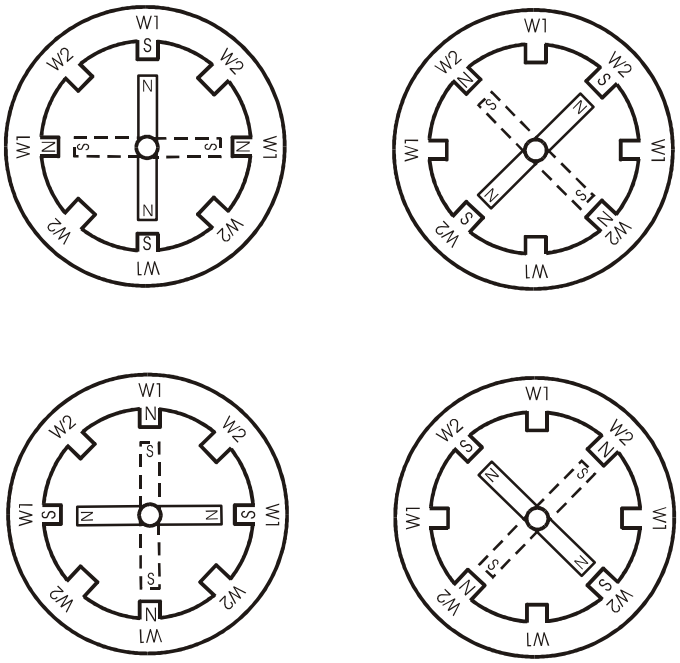

Figure 7: Moving the rotor on

The rotor motion is not smooth or continuous, but the shaft is rotating in steps of a certain angle α.
After m steps the shaft will have carried out one complete rotation. So it is possible to drive to a defined and reproducible rotor position.

The step resolution m is dependent on the motor construction and on the kind of electric control.

The standard stepper motors have got the following natural step resolutions:

2-Phase Motor

m = 200	Full step mode
m = 400	Half step mode

5-Phase Motor

m = 500	Full step mode
m = 1000	Half step mode

More precise step resolutions can be realised by electronic means. This function is called microstep function. With the help of more precise arithmetic gradation, the quarter, eighth and sixteenth part step, etc. will be realised.

If the number of steps per time unit is increased, the jerking motion of the motor shaft will change into more and more smooth rotating.

The speed is calculated as follows:

Speed = 60 * Step Frequency / Step Resolution

Speed in rotations per minute
Step frequency in Hz
Step resolution in steps per rotation

The rotor and load moments of inertia help to smoothen the motion.

The stepper motor can both drive to defined discrete positions, and drive a load by a defined speed.
It is an interesting fact, that a torque is also caused by the stepper motor during standstill, which is called the stall moment. If it is possible in the mechanic system, the stall moment can be decreased by "current lowering during standstill".

A typical driving profile normally consists of a starting phase with the start-stop frequency, an acceleration phase , a phase of constant speed, a deceleration phase, and finally a stop.

9.2 Control: Current Loop and Amplifier

The JX2-SM1D module has been designed for bipolar operation, i.e. it is possible to let the current flow through the motor coil in both directions. A bridge circuit according to **Figure 8** is apt best. For each motor phase an individual bridge will be needed. The power transistors of the amplifier have been shown symbolically as mechanic switches.

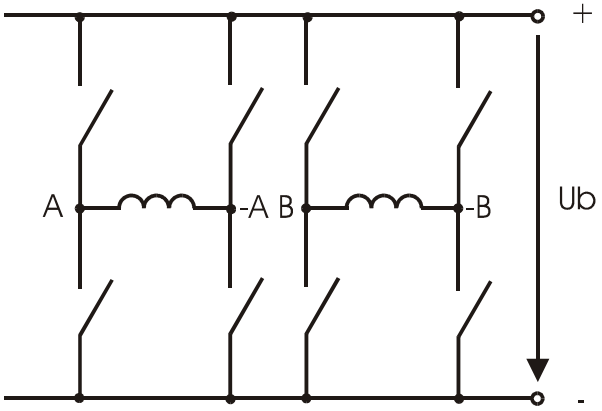

Figure 8: Bipolar switch for 2-phase stepper motors

Thus it is possible to limit the number of connections between the motor control and the motor to two per phase (plus PE) by serial connection of the part-windings in or at the motor.

To achieve a reliable positioning, a defined and constant moment is to be created up to an as high as possible speed. For this purpose, an apt control will be needed.
Basically, there is a difference between constant voltage and constant current control. The method applied most today is the constant current mode. Due to the development of the switching regulator technique and the availability of efficient and fast transistors, this method has become applicable.

During motor rotation, first of all the influence of the electro-mechanic force will be effective.
It is directed against the operating voltage, reducing the effective voltage during current build-up, while current relief becomes faster due to the electro-mechanic force.
Theoretically, the motor can be run up to the speed, at which the connected operating voltage is being compensated by the electro-mechanic force at that moment. Even before reaching this speed, the current increase graph is clearly flattening out, while the current decrease graph is rising, so that the rated value of the phase current is not reached any more. This causes the motor momentum to decrease as well.

Further, constant reversing of the magnetic fields during motor rotation will lead to a series of hysteresis losses, which have the same effect as an additional ohmic resistor and in the main lead to warm-up of the motor. Some ranges of speed are attenuated by these losses, which helps to stabilise the motor.

In constant voltage mode these losses immediately effect the torque, as the available power will be restricted by the voltage dropping resistor. For current limitation, a minimum value must be provided by the voltage dropping resistor.
According to circuit engineering, , the voltage dropping resistor will not be necessary during constant current mode.

During constant current mode, the motor can consume the more power from the operating voltage source in the beginning, the higher the speed will be. Due to the quality of the current control, the torque will thus remain constant over a greater value range. Yet, from a certain point, the influence of the electromotive force will be so big, that the rated phase current value will not be reached any more, which will cause the torque to drop.

Of course the drive will be the more dynamic, the higher the operating voltage has been set.

In Figure 9: **Torque - Stepper Frequency Characteristic** the torque - stepper frequency for constant current control will be shown.

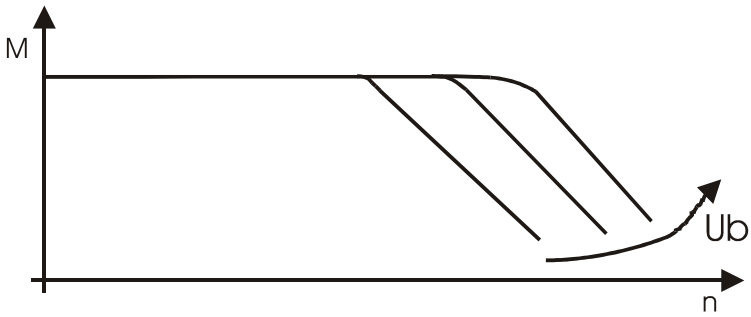

Figure 9: Torque - Stepper Frequency Characteristic

The JX2-SM1D module is a constant current control with an average current control.

In Figure 10 the course of the motor phase current, as well as the control impulses for the transistor are shown. Between one

defined clock pulse and the next, the transistors are switched on. The width of a switching-on pulse is determined by the current control.
The clock frequency for the JX2-SM1D stepper motor control is 20 kHz.

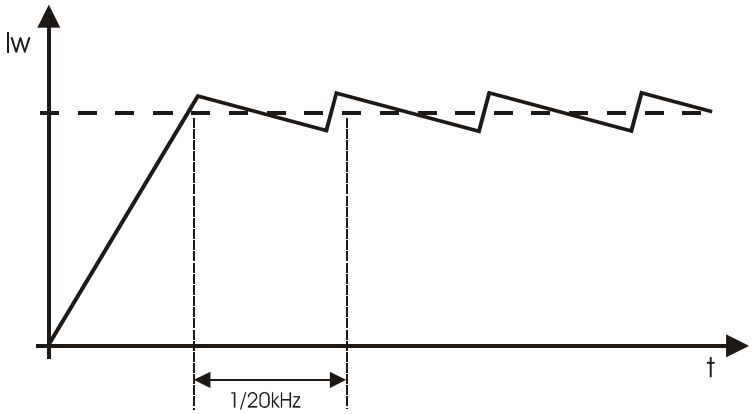

Figure 10: Circuit Diagram for Constant Current Control

The advantages of the average current control are the following:

- "inaccurate" peak current control is avoided,
- fast control after changing the nominal value,
- lower sensitivity towards spikes that have been caused by switching,
- independence from peripheral conditions.

The quality only depends from effectiveness and accuracy of the electronic controller components.

This makes high quality controlling possible, which will be needed to fulfil the high requirements for step angle accuracy in microstep mode.

9.3 Acceleration and Deceleration

The stepper motor is a slow device. It is not fit for great acceleration or deceleration.
Either positioning inaccuracies will be caused, or the stepper motor will simply come to a standstill.

In order to prevent this, please mind:

For starting and stopping, the stepper motor is not to be controlled in a higher step frequency than the start/stop frequency.
The start/stop frequency is the step frequency, at which the motor will start or stop without error.

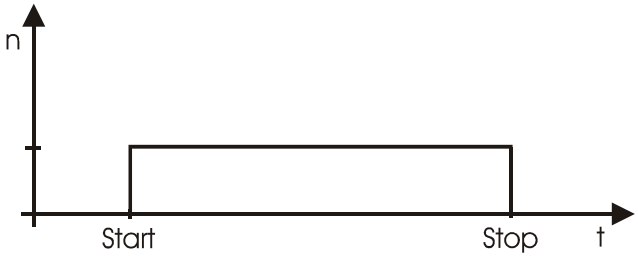

Figure 11: Start - stop mode

Normally, higher operation speeds will be required, though, i.e. the stepper motor speed is to be increased until it has exceeded the start/stop frequency up to its "operating speed".

Acceleration can be carried out either in a linear or in an exponential acceleration ramp.

A result of the linear ramp will be the constant acceleration of both motor and load. For this, a constant torque of the motor will be required. The possible acceleration depends on the available torque.

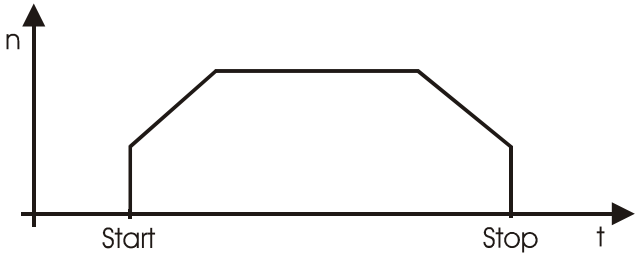

Figure 12: Acceleration in a linear ramp

The linear acceleration, respectively deceleration ramp can be realised with the help of the JX2-SM1D module.

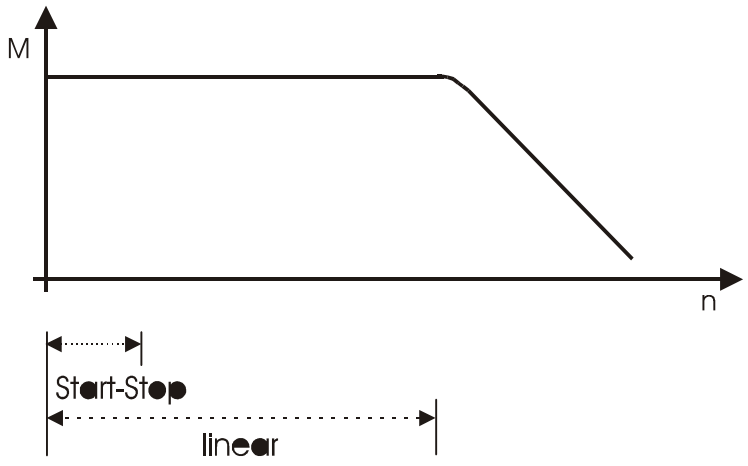

Figure 13: Usage of ramps in the torque range

9.4 Step resolution and step angle accuracy

In the JX2-SM1D module the following step resolutions can be set:

Mode	Step Resolution
Full Step	200 Steps / Revolution
1/2 Step	400 Steps / Revolution
1/4 Step	800 Steps / Revolution
1/8 Step	1600 Steps / Revolution
1/16 Step	3200 Steps / Revolution

In the chapter "What is a Stepper Motor?" it has been explained, how, during current supply in the full step mode, the north and south poles of the stator keep moving on, taking the rotor with them. The stator-rotor position after carrying out individual steps can be seen (full step position).
During full step mode, the coils will alternatingly be supplied with the value between the rated phase current value and zero.
During half step mode, motor phase supply will be carried out in a way that causes the rotor to have full step position and intermediate position (half step position) alternatingly. Thus, the motor resolution will easily be doubled.
By simultaneously supplying of the motor phases, the torque will be increased. In order to keep the torque constant during one revolution (smoother motion), the phase current can be decreased in half step position by factor √2.

In Figure 14, feeding of phase 1 and 2 in half step mode will be shown.

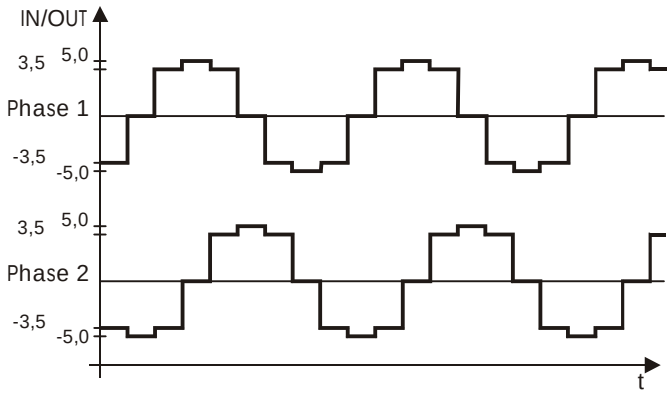

Figure 14: Phase current for half step mode

In 1/4 step mode, other than in 1/2 step mode, the motor phase will be fed with an additional intermediate current value.

In Figure 15, feeding of phase 1 and 2 in 1/4 step mode will be shown.

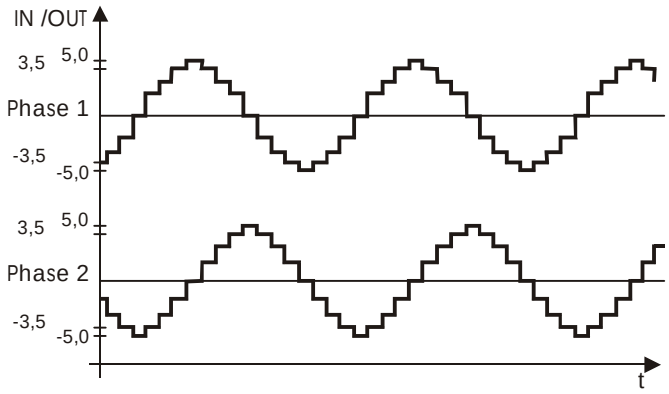

Figure 15: Phase current in 1/4 step mode

In 1/8 step and 1/16 step mode, the phase current graph will approach the sine respectively.

In theory, any step resolution can be achieved. Yet, there are practical limitations:

- Friction and load moments
- Locking moments (when no current is being supplied, a preferred position will be occupied by the rotor due to the permanent magnet)
- Inaccuracy of motor and drive
- Finite processor performance, in order to transfer new current values as nominal values to the current control.
- Higher accuracy requirements to the current control
  Very low current values can result in gapping operation, which will cause the relative current error to become very high. This will lead to high step angle inaccuracy.
- The current decrement of the motor winding is uncontrolled. Cyclic running can be impaired.

Basically, using a higher step resolution is only useful for low speed. In case of higher speed, the individual steps will be smoothened by the inertia. This means that continuous motion will be caused anyway.

Defining a certain step resolution suggests to the uninformed observer, that positioning in just this step resolution is also possible. In fact, there is a whole range of influencing factors, which cause the rotor to partially deviate from its nominal position. As a positive

side effect, this possible deviation rate will be maintained from step to step, if conditions remain constant, i.e. the relative positioning accuracy is acceptable. This deviation is called static load angle.
The influencing factors are the same as these, that limit any higher step resolution.

In dynamic mode, acceleration of the load requires an additional torque that is supplied by the motor. Thus, the static load angle described above will be increased by an angle depending on the acceleration rate. Further, the more the acceleration is increased, the more the step angle will be changed by the motor inductivity, Generally, the step angle is greater during the acceleration phases than it is normally.

In many applications, drifting of the position due to the dynamic load angle will be to no greater effect, as only driving towards a certain nominal position in a speed as high as possible or acceleration up to a certain speed is required. In applications, where high path accuracy is needed, knowledge of the path inaccuracy and of its reasons is of great importance.

Carrying out of a regular reference run is very important. This way, rotor position, respectively the impulses counted until reaching this position can be related to a real position.

10 Firmware

With the help of the firmware, the stepper motor axis can be run by the stepper motor control. Defining a certain operating behaviour under different conditions has been made possible by using various parameters, which are stored in certain registers of the JX2-SM1D module.

Positioning processes are controlled by the following instructions:

POS	an axis is positioned onto position "pos" by speed "v"
AXARR	as a query: Axis standstill is queried
AXARR	as an instruction: Axis is brought to a standstill

Another option for positioning is to control a stepper motor by giving the **REGISTER_LOAD** instruction.

An elegant and fast possibility for the controller of transferring the nominal position and nominal speed to the JX2-SM1D module has been provided by the POS instruction given in the firmware.

The values are loaded into two respective registers of the JX2-SM1D module:
Position: Register 1x102
Speed: Register 1x103

After this, the JX2-SM1D will cause the position to be reached by the defined nominal speed independently from the controller.

It is a typical application to have the controller query in a certain task, when the nominal position has been reached by giving the **AXARR** instruction, while quasi-simultaneously - which is the greatest advantage - other controller jobs can be carried out in a separate task.

Please note, though, that already during initialisation the parameters, that are necessary for the operating point, are loaded into the corresponding registers, which is done by giving the **REGISTER_LOAD** instruction.

Further reference will be made in a programming example below.

10.1 Addressing of Axes and Registers

Axis Numbering

By the example of the **xy axis** the pattern of axis numbering will be demonstrated.

- The first digit is to define the number of the SM1D module slot:
  x = slot number.
- The second digit is to define the number of the axis, which is to be addressed by the module
  y = axis number (always **1**)

Note!

For finding out the slot number, only the intelligent modules, yet no digital and analogue inputs and outputs will be counted (see table below).

Basic Device	JX2-SM1D	JX2-ID8 Input Module	JX2-SM1D
Module Position 1	Module Position 2	Module Position 3	Module Position 4
Input 101 .. 108	Axis **2**1	Input 201 .. 208	Axis **3**1

The Register Number

The example of register **REG 1xyzz** is to demonstrate the pattern of register numbering.

- The registers are addressed via five-digit numbers.
- The first digit is always **1**.
- The second digit **x** results from the number of the position, where the SM1D module has been placed.
- The third digit **y** refers to the **axis number,** which, in the case of the JX2-SM1D module is always **1.**
- The fourth and fifth digit **zz** is to define the actual **register number, zz** corresponding to register numbers **0** to **99.**

Basic Device	JX2-SM1D	JX2-ID8 Input Module	JX2-SM1D
Module Position 1	Module Position 2	Module Position 3	Module Position 4
Input **101 .. 108**	Register Numbers **121zz**	Input **201 .. 208**	Register Numbers **131zz**

10.2 Register Survey

R/W: Read/Write; Ro: Read only

Reg Nr.	Register Type		R/W Ro*)
1x100	status register	0 ... 8388607	R/W
1x101	command register	0 .. 57	R/W
1x102	nominal position	- 8388608 ... + 8388607	R/W
1x103	nominal speed (step frequency)	1 ... 25000	R/W
1x104	polarities	0 ... 3	R/W
1x105	acceleration ramp	0 ... 32767	R/W
1x106	deceleration ramp	0 ... 32767	R/W
1x107	destination window range	0 ... 8388607	R/W
1x108	start-/stop-frequency	1 ... 5000	R/W
1x109	actual position	- 8388608 ... + 8388607	Ro
1x111	present step frequency	0 ... 25000	Ro
1x114	positive software limit switch	- 8388608 ... + 8388607	R/W
1x115	negative software limit switch	- 8388608 ... + 8388607	R/W
1x121	scaling, max. step frequency	1 ... 255	R/W
1x122	motor phase current maximum value	0 ... 15	R/W
1x123	step resolution	2, 4, 8, 16	R/W
1x124	current lowering	0 ... 65000	R/W
1x125	current lowering	0 ... 15	R/W
1x167	relative position in the "Relative Positioning with Start Input Mode"	- 8388608 ... + 8388607	R/W
1x199	software version	-8388608 ... +8388607	Ro

10.3 Register Description

The following aspects are considered in the register description:

1. Contents of the register when being READ, i.e. for register allocation of the type **REGISTER_LOAD** [**220** with **R(1xyzz)**].
2. Contents of the register when being WRITTEN, i.e. for register addressing of the type **REGISTER_LOAD** [**1xyzz** with **R(220)**].
3. Value range, i. e. valid numeric values for the registers.
4. Register value immediately after switching on (resetting) the PROCESS-PLC.
5. Example for register use, plus description of the results of the instructions being given.

Register 1x100: Status register of the JX2-SM1D	
Function	**Description**
Read	Feedback about the stepper motor control statuses. Value after Reset: Depending on the present status.
Write	Bit 14 can be written into.
Value Range	0 to +8388607 (bitcoded)

The meaning of the individual status register bits:

Bit 0: Referenced?	1 = Reference has been set The home sensor has either been found or manual referencing has been carried out by giving command 3. 0 = Reference has been cleared Either autom. reference run is going on or status has been reset either by giving command 4 or by giving reset instruction.
Bit 1: AXARR?	1 = AXIS ARRIVED

The meaning of the individual status register bits:

		Either the destination has been reached by the axis, or it has been stopped by giving the AXARR instruction or by giving command 0.
Bit 2:	Axis in the destination window?	1 = Yes
Bit 4:	Limit switch negative?	1 = Limit switch is negatively active It is active, as long as the axis is standing on limit switch position
Bit 5:	Limit switch positive?	1 = Limit switch is positively active It is active, as long as the axis is standing on limit switch position
Bit 6:	Home sensor?	1 = Home sensor is active It is active, until the next positioning run is started.
Bit 7:	Software limit switch active?	1 = Yes It is active, until the next positioning run is started.
Bit 8:	Hardware limit switch active?	1 = Yes It is active, until the next positioning run is started.
Bit 9 - 10:		reserved
Bit 11:	Amplifier active?	1 = Yes Only then positioning is possible.
Bit 12:	Reference run error?	1 = Reference run error
Bit 13:	BUSY for commands 9 to 12	1 = Busy "Automatic Reference Run" is executed.
Bit 14:	Software limit switch enable	1 = Positioning with the help of software limit switches
Bit 15:		not occupied

The meaning of the individual status register bits:

Bit 16: Axis position?	1 = The axis is in the deceleration ramp
Bit 17 - 18:	not occupied
Bit 19: Under-voltage (U<)	1 = Yes
Bit 20: Short circuit (I>)	1 = Yes
Bit 21: Over-temperature (T>)	1 = Yes
Bit 22: Motor cable fault (MC)	1 = Yes (only, if bit 11=0 can be recognised/if amplifier is not active)

Note!

These status bits can easily be queried, set or cleared by giving the **BIT_SET** or **BIT_CLEAR** instruction.

Example:

In this program part, resetting of the busy-bit is being waited for. When a reference run, that has been started earlier, has been finished, the busy-bit will be reset.

```
....
WHEN
          BIT_CLEAR [REG=12100, Bit=13]
     THEN
....
```

Register 1x101: JX2-SM1D command register	
Function	**Description**
Read	Latest or presently carried out command Value after reset: 0
Write	Carrying out of a new command is started.
Value Range	0 to 57

The JX2-SM1D module responds to the following commands:

0	**Stop with deceleration ramp:** Decelerate in the set deceleration ramp.
1	**Activate amplifier:** By this command the status bit is set in register **1x100**. Only then positioning will be possible.
2	**Deactivate amplifier:** By this command status bit of register **1x100** is cleared. The motor will become de-energised.
3	**Set reference:** **It is only effective during axis standstill!** Actual and nominal position is set to zero, while status register bit 0 (reg. **1x100**) is set to **1**. Thus, the reference point has been set at the present axis position.
4	**Clear reference:** The reference is cleared. The status register bit 0 (reg. **1x100**) is reset to **0.** Only in this case the axis will be referenced again after activating the home sensor. Both the actual and nominal position are set to zero. The status register bit will be set to **1.** Command 4 need not be given, if commands 9 to 12 have been given.
5	**Stop the axis:**

The JX2-SM1D module responds to the following commands:

	Axis is stopped without a deceleration ramp. **This is only possible without any loss of steps at step frequencies below the maximum start/stop frequencies!**
9	**Automatic reference run mode 1:** The reference is cleared. The status register bit 0 (Reg. **1x100**) is reset to **0.** Start the reference run in positive direction up to the home sensor. If the positive limit switch has been activated, the running direction of the axis will be changed up to negative direction, until: – the home sensor has been found. Referencing depends on, whether command 22 or 23 has been given last. **Command 22:** (Default) The axis will be stopped at the reference point, while the actual and nominal position will be set to zero, while the status register bit 0 (Reg. **1x100**) will be set to **1.** **Command 23:** The home sensor is passed by the axis. At that moment the actual position is set to zero, while the status register bit 0 (Reg. **1x100**) is set to **1.** The loaded nominal position will remain unchanged, while the axis will move up to the negative home sensor. – the negative home sensor will be activated. After this, the reference run will be stopped by internally setting of nominal position = actual position. The reference run error will be reported in status register **1x100** by setting Bit 12. The automatic reference run will be carried out with the help of the step frequency that has been loaded into register **1x103**. At the time of giving command 22, the step frequency value must not be greater than the maximum start / stop frequency. In general, the start / stop frequency should not be greater than 1 kHz, as otherwise referencing according to stepping accuracy cannot be made.

The JX2-SM1D module responds to the following commands:

10 **Automatic reference run mode 2:**

The reference is cleared. The status register bit 0 (Reg. **1x100**) is reset to **0.**

Start the reference run in negative direction up to the home sensor. If the negative limit switch has been activated, the running direction of the axis will be changed up to positive direction, until:

– the home sensor has been found. Referencing depends on, whether command 22 or 23 has been given last.

Command 22: (Default)
The axis will be stopped at the reference point, while the actual and nominal position will be set to zero, while the status register bit 0 (Reg. **1x100**) will be set to **1.**

Command 23:
The home sensor is passed by the axis. At that moment the actual position is set to zero, while the status register bit 0 (Reg. **1x100**) is set to **1.** The loaded nominal position will remain unchanged, while the axis will move up to the positive home sensor.

– the positive home sensor will be activated. After this, the reference run will be stopped by internally setting of nominal position = actual position.
The reference run error will be reported in status register **1x100** by setting Bit 12.

The automatic reference run will be carried out with the help of the step frequency that has been loaded into register **1x103**.
At the time of giving command 22, the step frequency value must not be greater than the maximum start / stop frequency.

In general, the start / stop frequency should not be greater than 1 kHz, as otherwise referencing according to stepping accuracy cannot be made.

11 **Automatic reference run mode 3:**

The reference is cleared. The status register bit 0 (Reg. **1x100**) is reset to **0.**

The reference run into positive direction up to the positive limit switch is started. First, the home sensor will

The JX2-SM1D module responds to the following commands:

be ignored. At the positive limit switch the direction of the axis run will be changed up to negative direction, until:

– the home sensor has been found. Referencing depends on whether command 22 or 23 has been given last.

Command 22: (Default)
The axis will stop at the reference point. The actual and nominal position are set to zero, while the status register bit 0 (Reg. **1x100**) is set to **1.**

Command 23:
The home sensor is passed by the axis. At that moment the actual position is set to zero, while the status register bit 0 (Reg. **1x100**) is set to **1.** The loaded nominal position will remain unchanged, while the axis will move up to the negative limit switch.

– the negative limit switch is activated. After this, the reference run will be terminated by internally setting nominal position = actual position.
The reference run error will be reported in status register **1x100** by setting bit 12.

The automatic reference run will be carried out in the step frequency that has been loaded into register **1x103.**
When giving command 22, the value must not be greater than the start/stop frequency.

In general, the start / stop frequency should not be greater than 1 kHz, as otherwise referencing according to stepping accuracy cannot be made.

12	**Automatic reference run mode 4:** The reference is cleared. The status register bit 0 (Reg. **1x100**) is reset to **0.** The reference run into negative direction up to the negative limit switch is started. First, the home sensor will be ignored. At the negative limit switch the direction of the axis run will be changed up to positive direction, until: – the home sensor has been found. Referencing depends on whether command 22 or 23 has been given last. **Command 22:** (Default) The axis will stop at the reference point. The actual and nominal position are set to zero, while the status register bit 0 (Reg. **1x100**) is set to **1.** **Command 23:** The home sensor is passed by the axis. At that moment the actual position is set to zero, while the status register bit 0 (Reg. **1x100**) is set to **1.** The loaded nominal position will remain unchanged, while the axis will move up to the positive limit switch. – the positive limit switch is activated. After this, the reference run will be terminated by internally setting nominal position = actual position. The reference run error will be reported in status register **1x100** by setting bit 12. The automatic reference run will be carried out in the step frequency that has been loaded into register **1x103.** When giving command 22, the value must not be greater than the start/stop frequency. In general, the start / stop frequency should not be greater than 1 kHz, as otherwise referencing according to stepping accuracy cannot be made.
17	**Relative positioning - ON:** The value loaded into register **1x102** refers to the nominal position stored last in register **1x168** - not to the reference position. The new position value results of the sum of the values loaded into registers **1x168 + 1x102.**
18	**Absolute positioning - ON (Default):** The value loaded register **1x102** as a nominal position

	refers to the reference position.
19	**Continue interrupted positioning:** The positioning interrupted by giving command 0 or 5 (AXARR with or without deceleration ramp) will be continued **Absolute positioning:** The nominal position has been loaded into register **1x102.** **Relative positioning:** The new positioning value results from the sum of the values loaded into registers **1x168 + 1x102.** **Relative positioning with start input:** The new positioning value results from the sum of the values loaded into registers **1x168 + 1x167**.
20	**Relative positioning with start input - ON:** The start input is input "REF". If this input is being fed with 24V and the axis is at a standstill (status bit 1 = 1), relative positioning will be started. Before reaching the destination position, the "REF" input must be fed with 0V. Otherwise, the axis will not be stopped, but a new positioning run will be started. The relative positioning value has been loaded into register **1x167.**
21	**Relative positioning with start input - OFF (Default)**
22	**Stop at reference point - ON (Default):** During the reference run, the axis will stop at the reference point. Both the actual and nominal position will be set to zero, while the status register bit. During the reference run, the axis will stop at the reference point. Both the actual and nominal position are set to zero, while the status register bit 0 (reg. **1x100**) is set to **1**.

23	**Stop at reference point - OFF:** During the reference run, the home sensor will be passed by the axis, which will cause the actual position to be set to zero and the status register bit 0 (reg. **1x100**) to be set to **1.** The loaded nominal position will remain unchanged.
56	**Start endless run into positive direction:** The endless run will be carried out into positive direction by the step frequency that has been loaded into register **1x103.** It will be terminated by giving commands 0 or 5 (AXARR). Termination can also take place during the run towards the positive limit switch.
57	**Start endless run into negative direction:** The endless one will be carried out into negative direction by the step frequency that has been loaded into register **1x103.** It will be stopped by giving commands 0 or 5 (AXARR). Termination can also take place during the run towards the negative limit switch.

Example 1:

The amplifier is activated by the following command. Only then positioning is possible.

```
;transfer of command 1 to the JX2-SM1D module:
THEN
      REGISTER_LOAD [12101 with 1]
```

Example 2:

In the following small program part, an automatic reference run is called up; then its termination (busy-bit cleared) is being waited for.

```
;transfer of command 1 to the JX2-SM1D module:
THEN
     REGISTER_LOAD [12101 with 1]
;query of busy-bit
WHEN
          BIT_CLEAR [12100, Bit=13]
     THEN
```

Register 1x102: Nominal position of the JX2-SM1D	
Function	**Description**
Read	Nominal axis position Value after reset: 0 (steps)
Write	Next nominal axis position and simultaneous start of the positioning process
Value range	-8388608 up to +8388607 (steps)

Example 1:

Positioning of a stepper motor axis in slot 2 is started. Absolute positioning onto 10000 steps is required:

;transmission of the destination position to the JX2-SM1D module. Immediately after this, the new position will be driven to by the axis:

```
THEN
      REGISTER_LOAD [12102 with 10000]
```

Important!

A new value in register 1x102 will immediately affect the positioning process. The destination position will be changed at once. A sudden change of direction or stop during a positioning process caused by a new destination position will lead to a loss of steps, if the step frequencies are greater than the start / stop frequency.

Example 2:

Positioning of a stepper motor axis in slot 2 is started. The destination position is to be in a relative distance of 5000 steps from the present position:

```
; Transmission of command 17 (relative positioning) to the
; N-SM1D module:
THEN
  REGISTER_LOAD [12101 with 17]

; Transmission of the relative destination position to the
; JX2-SM1D module. Immediately after the transmission the
; axis will drive towards the new position:
THEN
  REGISTER_LOAD [12102 with 5000]
```

Example 3:

Reading and display of the present nominal position:

```
THEN
  DISPLAY_REG [#0, cp=1, Reg=12102]
```

The present nominal axis position is shown in the displays of the user interfaces (no graphic display) on the very left in the first line.

Register 1x103: Max step frequency of the JX2-SM1D	
Function	**Description**
Read	Max. step frequency of the axis Value after reset: 10 Hz
Write	New maximum step frequency for the axis; the new value will be effective immediately.
Value Range	<Reg. 1x108>* to 25000 (in Hz)

*: The smallest value to be set is the content of register 1x108

Effects of writing:

1. The axis is at a standstill:

The new value has been stored for the next positioning run.

2. Positioning is just in process:

The new value will be taken over as a new maximum nominal speed. The change of speed to the maximum value - if the maximum value is greater than the start/stop frequency - is not carried out in a jerk; it is rather incremented, respectively decremented by describing a ramp.

Important!

The real nominal step frequency (maximum value) results from the products of the values written in registers 1x103 and 1x121.

```
real nominal frequency = <1x103> * <1x121>
```

Example 1:

The speed of a stepper motor axis in slot 2 is to be changed:

```
THEN
  REGISTER_LOAD [12121 with 1](Default)
  REGISTER_LOAD [12103 with 2500]
```

Driving by a step frequency of 2500 Hz is forced.

Example 2:

The step frequency of a stepper motor axis in slot 2 is to be incremented:

```
THEN
  REG 12103
  =
  REG 12103
  +
  1000
```

The step frequency of the axis in incremented by 1000 Hz.

Register 1x104: Polarities	
Function	**Description**
Read	Present polarity setting Value after reset: 0 (Home sensor and limit switch: NCC)
Write	New setting of the reference and limit switch polarities
Value range	0 to 3
Value after reset	3 (home sensors and limit switches: NOC)

This register is bitcoded:

Bit 0: 0 = limit switch 0V-active (NCC).
1 = limit switch 24V-active (NOC).

Bit 1: 0 = home sensor 0V-active (NCC).
1 = home sensor 24V-active (NOC).

24V-active: If 24 V have been attached to input "REF", referencing will be carried out at the present position.

0V-active: If 0V have been attached to input "REF" , referencing will be carried out at the present position.

Register 1x105: Acceleration ramp of the JX2-SM1D	
Function	**Description**
Read	Presently effective value of the acceleration ramp parameter Value after reset: 10 (Hz / 4ms)
Write	New value for the acceleration ramp parameter
Value range	1 to 32767 (Hz / 4 ms)

Results of writing:

1. Axis has come to a standstill:

The new value for the next positioning run has been stored.

2. A positioning run is presently in process:

Caution

The new value affects the present positioning run!
The motor loses steps.
➢ **Do not write into register 1x105 during a positioning run!**

Meaning:

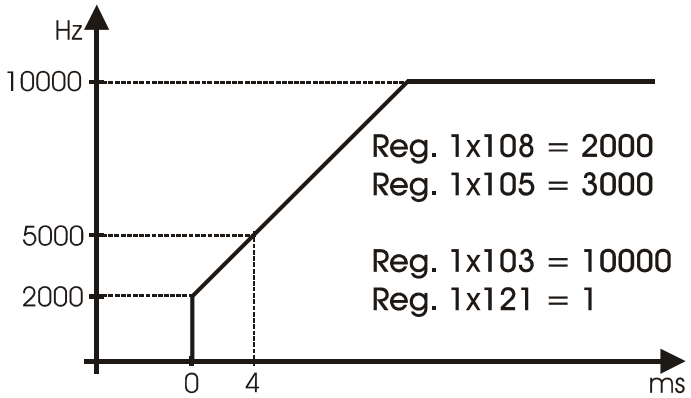

Figure 16: Acceleration via acceleration ramp

It is necessary for the stepper motor to be incremented until the start/stop frequency has been exceeded and the "operating speed" has been reached.
Acceleration is carried out in a linear acceleration ramp. The gradient of the ramp reflects the change of the step frequency in a defined time, which is 4ms in this case.

Important!

The parameter value must be selected according to the stepper motor drive.
If the acceleration ramp is too steep, positioning inaccuracies will occur due to load angle shifting, or else the stepper motor will simply come to a standstill.

Register 1x106: Deceleration ramp of the JX2-SM1D	
Function	**Description**
Read	Presently valid deceleration ramp parameter value Value after reset: 10 (Hz / 4ms)
Write	New value of the deceleration ramp parameter
Value range	1 to 32767 (Hz / 4 ms)

Results of writing:

1. Axis is at a standstill:

New value has been stored for the next positioning run.

2. Positioning is just being in process:

The new value affects the present positioning run!
The motor loses steps.
➢ **Do not write into register 1x106 during a positioning run!**

Caution

Result:

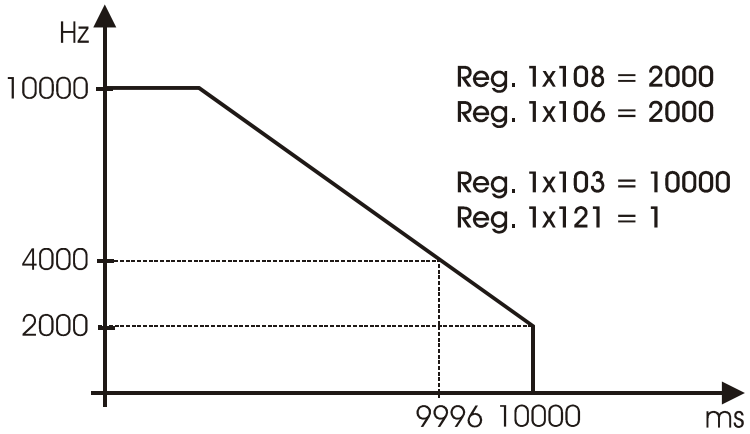

Figure 17: Deceleration in a deceleration ramp

It is typical for the stepper motor to be decelerated from its "operating speed" down to the start/stop frequency.

Deceleration is carried out in a linear deceleration ramp. The gradient of the ramp reflects the change of the step frequency during a defined stretch of time, which, in this case, is 4 ms.

Important!

The parameter value must be selected according to the stepper motor drive.
If the deceleration ramp is too steep, positioning inaccuracies will occur, or else the stepper motor will simply come to a standstill.

Register 1x107: Destination window range of the JX2-SM1D	
Function	**Description**
Read	Presently valid destination window parameter value Value after reset: 0 (steps)
Write	New value of the destination window parameter
Value range	0 to 8388607 (steps)

Results of writing

1. Axis has come to a standstill:

The new value for the next positioning run has been saved.

2. Positioning is just being in process:

The new value will be taken over immediately. If the axis has not been in the destination window yet, the new value will be used. If the axis is in the destination window already, the new value is of actually no effect to the present positioning run.

Result:

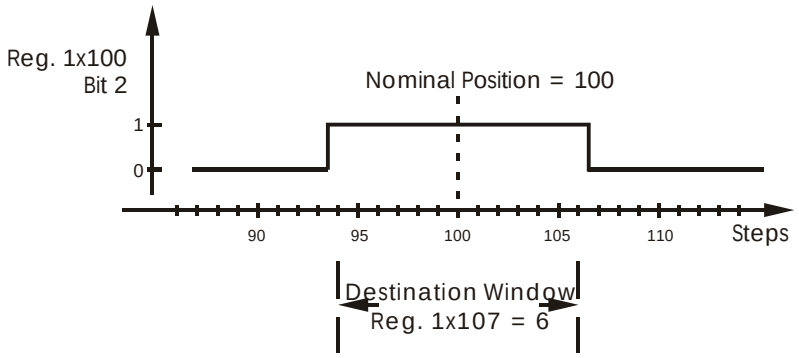

Figure 18 Destination window

When the destination window has been reached - not only, when the exact nominal position has been reached - the following transfer condition has already been fulfilled:

```
WHEN
      AXARR axis=21
    THEN
      ;PROCESS-PLC is going to carry out further
      control tasks. For this purpose, the axis
      has to be in a certain destination window.
```

The controller will start with the processing of further control tasks, when the axis has entered the destination window.
Reaching the exact nominal position will not be waited for, yet the positioning process will not be finished before reaching the nominal position.

This way, a faster program run can be achieved, if this can be tolerated.

Register 1x108: Start / stop frequency of the JX2-SM1D	
Function	**Description**
Read	Presently valid start/stop frequency parameter value Value after reset: 10 (Hz)
Write	New value for the start/stop frequency parameter
Value range	1 to 5000 (Hz)

Results of writing:

1. The axis has come to a standstill:

A new value has been stored for the next positioning run.

2. Positioning is just being in process:


Caution

The new value affects the present positioning run!
The motor loses steps.
➢ **Do not write into register 1x108 during a positioning run!**

Meaning:

For starting and stopping the stepper motor must not be controlled in a step frequency that is higher than the start/stop frequency.
The start/stop frequency is the step frequency, at which motor start and stop will be error-free.
The starting behaviour will be affected by long delays, if the defined start / stop frequency is too small.

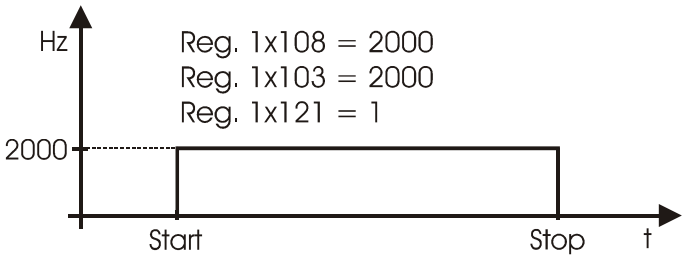

Figure 19: Start / stop operation: Max. step frequency ≤ Start / stop frequency

Important!

The parameter value must be tuned to the stepper motor drive.
If the start / stop frequency is too great, inaccuracies will occur, or else the stepper motor will simply come to a standstill.

It is necessary to optimise the settings by carrying out practical tests. Step by step the start/stop frequency will be increased. Afterwards, fault-free positioning by the stepper motor will be checked for.

Register 1x109: Present actual position of the JX2-SM1D	
Function	**Description**
Read	Actual axis position Value after reset: 0 (steps)
Write	not permitted
Value range	-8388608 to +8388607 (steps)

Meaning:

The present actual position has been written into register 1x109.

Important!

The present actual position stands for the "internal" count of the axis, as there will be no feedback by the motor.
The stepper motor drive has been designed correctly, if the present axis position is in agreement with this register value.

After switching on the stepper motor drive and before the first positioning run, parameter setup and reference run will be necessary.

After a successful reference run, and after carrying out commands 3, 9, 10, 11 and 12, the value of register 1x109 will be set to zero.

Example:

When the stepper motor axis in slot 2 has passed the absolute position "2000", activate output "103".

```
WHEN
    REG 12109
    >
    2000
  THEN
    OUT 103
```

Register 1x111: Present step frequency of the JX2-SM1D	
Function	**Description**
Read	Present step frequency Value after reset: 0 (Hz)
Write	for reading only
Value range	0 to 100000 (Hz)

Meaning:

Register 1x111 contains the present step frequency in Hz, by which the stepper motor is driven at that moment.

The present step frequency is a measure for the present motor speed.

Register 1x114: Position of the positive limit switch of the JX2-SM1D	
Function	**Description**
Read	Present position of the positive software-limit switch Value after reset: +8388607 (steps)
Write	A new value is defined
Value range	-8388608 to +8388607 (steps)

Meaning:

Register 1x114 contains as its value the end position in positive direction.
By setting Bit 14 of the status register 1x100, the "software limit switch" function is activated. If the value written into register 1x114 has been exceeded by the actual position, the limit switch function will be activated.
The hardware limit switch function will not be changed and will remain valid.

The status of the two software limit switches can be queried for in status register 1x100:

Bit 7 = 1:	Positive <u>or</u> negative software limit switch has been activated.
Bit 7 = 1 <u>and</u> Bit 5 = 1:	Positive software limit switch has been activated.
Bit 7 = 1 <u>and</u> Bit 4 = 1:	Negative software limit switch has been activated.

Register 1x115: Position of the negative software limit switch of the JX2-SM1D	
Function	**Description**
Read	Present position of the negative software limit switch Value after reset: -8388608 (steps)
Write	A new value is defined
Value range	-8388608 to +8388607 (steps)

Meaning:

Register 1x115 contains as its value the end position in negative direction.
When Bit 14 of the status register 1x100 is set, the "software limit switch" function is activated. If the actual position has fallen below the value written into register 1x115, the limit switch function will be activated.
The hardware limit switch function will not be changed and will remain valid.

The status of the two software limit switches can be queried for in status register 1x100:

Bit 7 = 1:	Positive <u>or</u> negative software limit switch has been activated.
Bit 7 = 1 <u>and</u> Bit 5 = 1:	Positive software limit switch has been activated.
Bit 7 = 1 <u>and</u> Bit 4 = 1:	Negative software limit switch has been activated.

Register 1x121: Scaling the maximum step frequency of the JX2-SM1D	
Function	**Description**
Read	Presently valid scaling of the max. step frequency. Value after reset: 1
Write	A new scaling is defined.
Value range	1 to 255

Meaning:

The nominal speed (maximum step frequency) results from the product of the values written in registers 1x103 and 1x121.

Nominal speed = <1x103> * <1x121>

Select the value for register 1x121 (scaling) in such a way, that the speed values that are needed for the application can be set. Thus, a compromise between resolution and maximum value is to be made.

Note!

With the "POS" Makro instruction of the controller, a value of 32767 as a maximum can be written into the speed value register 1x103.

Register 1x122: Maximum motor phase current of the JX2-SM1D	
Function	**Description**
Read	Presently valid setting for the maximum motor phase current Value after reset: 5 (2.0 A)
Write	Setting of a new current value
Value range	0 to 15

Important!

If motors with a motor phase current that is smaller than 2 Amp are used, make sure this value has been adapted before switching on the amplifier.

Results of writing:

1. Axis is at a standstill:

A new current value has been stored for the next positioning run.

2. Positioning is just being in process:

A change of the current setting is not permitted.

Current values to be set:

Register value	Max. motor phase current
0	0.5 A
1	0.8 A
2	1.1 A
3	1.4 A
4	1.7 A
5	2.0 A
6	2.3 A
7	2.6 A
8	2.9 A
9	3.2 A

10	3.5 A
11	3.8 A
12	4.1 A
13	4.4 A
14	4.7 A
15	5.0 A

Meaning:

The torque of a stepper motor refers to the phase current rated value which has been defined in the data sheet. This value has been defined by the motor manufacturer as a maximum, constantly permitted value.
This phase current rated value must be written into register 1x122 as maximum motor phase current value. In Figure 20 the rated phase current value is 5,0 A.

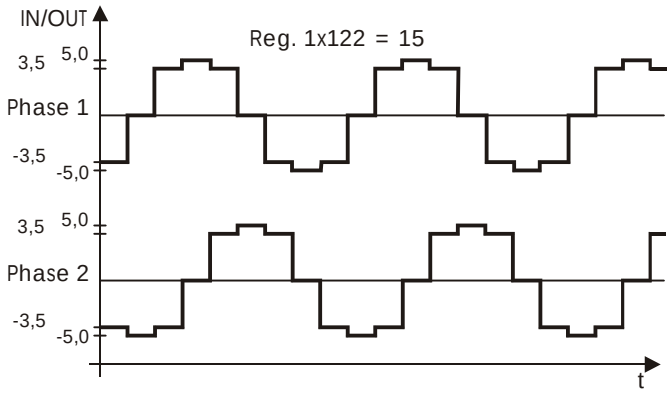

Figure 20: Chronological course of the motor phase current in half-step mode

Register 1x123: Step resolution of the JX2-SM1D	
Function	**Description**
Read	Presently valid step resolution Value after reset: 2 (half-step)
Write	Setting of a new step resolution
Value range	1, 2, 4, 8, 16

Results of writing:

1. The axis has come to a standstill:

The new step resolution has been stored for the next positioning run.

2. Positioning is just being carried out:

Changing of the step resolution is not permitted.

Setting the step resolution:

Register Value	Step Resolution
1	full step
2	1/2 step
4	1/4 step
8	1/8 step
16	1/16 step

Note!

If, at a constant step frequency, half step mode is to be changed into quarter step mode, the speed of the stepper motor will be halved.

The speed value is calculated as follows:

speed = 60 * step frequency / step resolution

speed = 60 * <1x103> / <1x123>

speed in revolutions per minute
step frequency in Hz
step resolution in steps per revolution

Note!

In full step mode the current has been reduced to factor 0.707 of the value defined in register 1x122.
In full step mode - thus in comparison to half step mode - the torque will remain the same. The speed will be doubled.

Register 1x124: Current Lowering in the Destination Point (Time)	
Function	**Description**
Read	When the axis has reached its destination, the current will be lowered to the value written in register 1x125. Value after reset: 0 (no current lowering)
Write	Set a new time value
Value Range	0 to 65000 (ms)

Register 1x125: Current Lowering in the Destination Point	
Function	**Description**
Read	Current Value after current lowering Value after reset: 5 (2.0 A)
Write	Set a new current value
Value Range	0 to 15 (scaling see reg. 1x122)

Positioning after Current Lowering

First, the current is set to the value written in register 1x122, then positioning is started.

Register 1x167: Relative Positioning with Start Input	
Function	**Description**
Read	Present relative positioning for the "Relative positioning with Start Input" mode. Value after reset: 0 (steps)
Write	A new value is defined
Value Range	-8388608 to +8388607 (steps)

Meaning:

The start input is the input "REF". As long as this input is connected to a 24V power supply, relative positioning is being started.
Before reaching the destination position, input "REF" must be connected with 0V. Otherwise, the device will not be stopped, but a new positioning run will be started.
The relative position value has been written into register **1x167**.

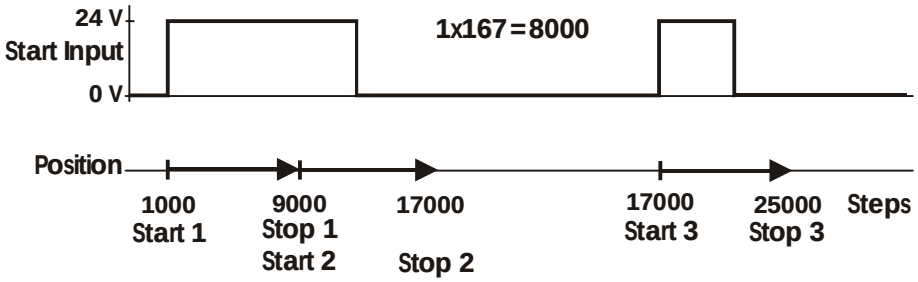

Figure 21: Chronological course of the positioning run with start input

Example:

Via the start input, relative positioning is to be started. This is of great use, when applications with short reaction times to irregular signals are to be carried out, e.g. packages are to be transported from one assembly line to another.

; Transfer of command 20 (relative positioning with start input) to the JX2-SM1D module:

```
THEN
  REGISTER_LOAD [12101 with 20]
```

; Transfer of the relative destination position to the JX2-SM1D module:

```
THEN
  REGISTER_LOAD [12167 with 8000]
```

Each time, when the start input is connected to 24 V and when the axis has come to a standstill, positioning by 8000 steps will be started independently from the CPU.

Register 1x168: Absolute position of the latest JX2-SM1D positioning	
Function	**Description**
Read	Absolute position of the latest positioning run. Value after reset: 0 (step)
Write	does not make sense
Value	-8388608 to +8388607 (steps)

Meaning:

Register 1x168 serves as an internal auxiliary register for carrying out relative positioning.
In this register, the absolute nominal position of the latest positioning run has been stored. This value will be added by the JX2-SM1D stepper motor control to the relative position defined by the user (reg. 1x102 or 1x167) ; the result will be the new absolute destination position to be fed back to the stepper motor control.

The same way, the original destination for the positioning run to be continued after interruption will be calculated (command 19).

Register 1x199: Number of the Software Version	
Function	**Description**
Read	Software version. Value after reset: Present version
Write	not permitted
Value Range	-8388608 to +8388607

Meaning:

The version number of the JX2-SM1D module operating system (software) can be read from this register.

Note!

For answering technical questions, the version number should be given.

11 Reference Run

When starting a positioning run by stepper motors, the present position will not be reported. Thus, a reference run should be carried out after switching on the system at the latest, in order to give the present position value to the axis.

There are several possibilities of carrying out a reference run:

- As commands of the stepper motor control four different modes for automatic reference runs have been stored (see chapter 10: Firmware).

- It is also possible to write an individual program with the help of the programming instructions that is to carry out a reference run.

Important!

As there is no feedback given by the motor, the steps having been output to the motor are added up by the JX2-SM1D module. The sum will be stored in register 1x109.

After switching on the JX2-SM1D module, the content of register 1x109 will be zero. If by chance the axis has not been positioned on the reference position, the axis position will not be defined any more.

Before the first positioning, a reference run should be carried out. The axis will be in the reference position then.

The step frequency during the reference run should be smaller than, or equal to the start / stop frequency, if the axis is to come to a standstill at the reference point.

During referencing, the home sensor will be queried every 500 µs. This way, the reference point will always remain the same, if the reference run is being carried out in a frequency that is smaller than 1kHz, <u>and</u> if the home sensor is always driven to from the same direction <u>and</u> in a step frequency that will constantly remain the same.

Thus, a reference run should only be carried out in mode 3 (command 11) and mode 4 (command 12), unless a defined position has been driven to before switching off.

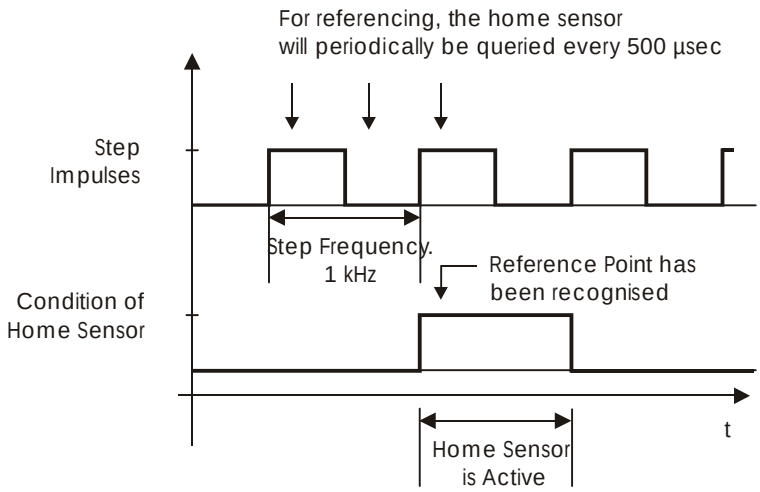

Figure 22: Cyclic query of the home sensor

The home sensor is located on the positioning path between the two limit switches - generally near one of them.
A limit switch can also have the function of a home sensor. For this purpose, a limit switch input and the home sensor input are bridged. The limit switch and home sensor polarities that are to be set are different from each other.
Immediately after leaving the limit switch position, referencing is being carried out. In this case, half of the positioning range - the positive part - is available.

Note!

Below, the programming instructions, that are needed for carrying out a reference run, will be described.

In example 1, programming of an individually designed reference run will be illustrated. In example 2, the automatic mode for reference run programming, provided by the JX2-SM1D operating system, will be used.

In both examples a positioning path is assumed, on which the home sensor is located right next to the negative limit switch (see Figure 23).

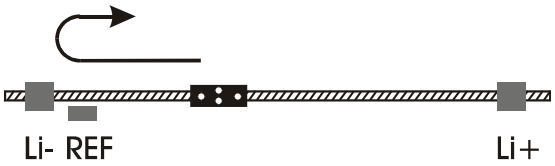

Figure 23: Positioning path for the reference run

In both examples, the reference run is carried out as follows:

- Drive up to the negative limit switch; the home sensor is being passed.
- Drive in positive direction up to the home sensor.
- Stop at the home sensor.

Example 1: Starting an individually designed reference run

```
;Drive onto the negative limit switch and stop there
;The destination is a negative position, which will definitely not be
;reached before driving towards the limit switch
;The axis will automatically be stopped by the controller, when the
;negative limit switch has been reached
     THEN
       POS [axis=21, pos=-8380000, v=1000]

;When the negative limit switch has been reached by the axis,
;then
   WHEN
       BIT_SET [Reg=12100, Bit=4]
     THEN
;Clear reference
;When the home sensor is activated next, the axis will have been
;newly referenced
       REGISTER_LOAD [12101 with 4]

;Continue in positive direction up to the home sensor
;If command 22 (reg. 1x101) - default - has been set,
;the axis will stop at the home sensor.
     THEN
       POS [axis=21, pos=8380000, v=1000]

;Wait, until the reference run has been stopped.
;For this reason, the status register bit 0 will be queried.
   WHEN
       BIT_SET [reg=12100, Bit=0]
     THEN
     . . .
```

Example 2: Starting an Automatic Reference Run

```
;Set the speed for the reference run
;Step frequency: 1 kHz
;Stopping at this frequency should be possible without losing
;steps
    THEN
      REGISTER_LOAD [12103 with 1000]

; Start automatic reference run by giving command 12
    THEN
      REGISTER_LOAD [12101 with 12]

; Wait, until the reference run is finished. To know, when the
; reference run is finished status register bit 0 should be queried
  WHEN
      BIT_CLEAR [reg=12100, Bit=13]
    THEN
  IF
      BIT_SET [reg=12100, Bit=12]
    THEN
      DISPLAY_TEXT [#0, cp=1,
                    "reference run error!"]
    ELSE
      DISPLAY_TEXT [#0, cp=1,
                    "reference run OK!"]
    THEN
    . . .
```

12 Setup

12.1 Selection of Motors

Step 1:

➢ Define the step resolution and positioning accuracy that will be needed.

How can the necessary resolution be achieved?

- Two-, three- or five phase stepper motor?

Mechanic reduction / transmission as spindles, drives and rack-and-pinion drives

Step 2:

➢ Define mass m and moments of inertia J of all parts to be moved.

Step 3:

➢ Calculate the acceleration ratio that results from the required time behaviour of the time to be driven.

Step 4:

➢ Calculate the forces that result from masses, moments of inertia and the corresponding acceleration ratios.

Step 5:

➢ Transmit forces and speeds onto the motor axis, using the parameters and efficiency factors of the interconnected mechanic transmissions.

➢ The result will be the speed and torque path that have to be applied to the motor shaft.

It is helpful to start calculating the drive at its last unit, which normally is the load. By any further element, speed and forces will be transmitted, and due to its own losses and masses additional forces, respectively torque, will be added. The sum of all calculated forces and moments will occur at the motor shaft.

Step 6:

➢ Determine the adequate motor by the torque characteristics.
This motor must be apt to produce the calculated torque and speeds.

➢ Calculate another torque that is a product of the motor inertia and the speeds that occur at the shaft ($M=J*\alpha$).
This torque is to be added to the torque already calculated.

Can this new torque be reached by the motor?
Is there still a reserve of 20 to 30%?
If there are no more reserves: Consider, whether the drive is to be optimised.

Step 7:
You have found the motor:

➢ Calculate the phase current by the motor characteristic, which is necessary to acquire the required torque.

➢ Calculate the step frequency out of the required speed and step resolution.

➢ Test, whether step resolution and step frequency can be realised with the JX2-SM1D module phase current.

The following limiting conditions are predetermined by the JX2-SM1D module:
- max. motor operating voltage (24 ... 70V DC)
- max. phase current ($I \leq 5{,}0A$)
- linear ramp
- 2-phase stepper motor
- max. step resolution (max. 1/16 step operation)
- max. step frequency (max. 27 kHz)

At this maximum step frequency the torque can still be kept constant by the JX2-SM1D controlling the current.

12.2 Parameter Initialisation

You have decided on the JX2-SM1D module and on a 2-phase stepper motor.

You are acquainted with the following values and data:

- motor phase current
- motor operation voltage
- step resolution
- maximum step frequency
- kind of home sensor and limit switch
- estimation of the start/deceleration ramp
- estimation of the start/stop frequency

Before the first positioning run, the following steps are to be carried out:

➢ Make sure all connections are all right. If the installation has not been carried out properly, positioning will be impossible. Please compare with the connection diagram.

➢ Make sure the operation voltages are all right.

➢ Check the two limit switches and the home sensor for proper functioning.
Activate the limit switches and the home sensor by hand. At the same time, check the conditions of status bits 4 to 6 in the SYMPAS setup screen. A change of condition must take place.

➢ Demount the motor.

➢ Write the following program:

```
TASK 0

; initialisation of the JX2-SM1D; it has been plugged into slot 2.

    THEN
; load the motor current
;important, if the phase current < 2.0 A!
; value: 3.2 Ampere
    REGISTER_LOAD [12122 with 9]

; set the step resolution
; value: 1/4 step operation
    REGISTER_LOAD [12123 with 4]
```

```
;set the home sensor and limit switch polarities
;the home sensor is an NOC, the limit switches are NCCs
    REGISTER_LOAD [12104 with 2]

;set the start/stop frequency
;make the first estimation result the value to be set, e.g. 200 Hz
;if possible, remain in the safe range
    REGISTER_LOAD [12108 with 200]

;activate the amplifier by giving a command
    REGISTER_LOAD [12101 with 1]

;set the nominal speed
;make the step frequency equal to the set start/stop frequency
    REGISTER_LOAD [12103 with 200]

;start positioning
    REGISTER_LOAD [12102 with 1000]

;set a stop at this program position
    -FLAG 0
WHEN
    FLAG 0
THEN

;go to the beginning of the task
GOTO 0
```

- Start this program in the controller.
- Check, whether the motor is following the rotational direction that is moving the mechanical parts up to the positive limit switch.

  If so, build in the motor again.

  If not, exchange the wiring of <u>one</u> motor phase (reversal of the torque), <u>then</u> build the motor back in.

- You have connected the motor, home sensor and limit switch toe the JX2-SM1D correctly. The JX2-SM1D is correctly being supplied with 24 Volt. The motor operation voltage has been connected.

If up to now everything has been all right:

- Check for steps getting lost at the required start/stop frequency.

Process:

- The axis is driving towards a defined position in start/stop operation (nominal speed = start/stop frequency).
  For this purpose write a certain position value into register 12102.
- After this, check whether steps have got lost.
- If the position is correct, repeat the motion increasing the start/stop frequency, until ideally the required value has been reached.
  Please remember to increment the values written in registers 12102 and 12108 in the same way.

For this drive system, the fastest possible start/stop frequency has been set.

Now the start/deceleration ramp is to be set:

Process:

- Write the maximum step frequency as a value into register 1210.
- Drive towards a defined position in a linear ramp.
  For this purpose, write a certain position value into register 12102. The gradient of the start, respectively deceleration ramp is 10Hz/4ms (default value).
- After this, check whether steps have got lost.
- If the position is correct, repeat the motion increasing the start/stop frequency, until the required value has been reached.

  Increasing the acceleration ramp:
  REGISTER_LOAD [12105 with "new value"]
  Increasing the deceleration ramp:
  REGISTER_LOAD [12106 with "new value"]

You have set the optimum start/deceleration ramp for this drive system.

Stepper motor and JX2-SM1D module have been synchronised. In a certain range of operation, the drive system will function reliably enough.

13 Exemplary Application

With the help of a stepper motor, a linear motion is to be realised. The line is limited by a negative limit switch on one end and a positive limit switch on the other end.
The negative limit switch functions as a home sensor at the same time.

Below, the wiring diagram will be presented:

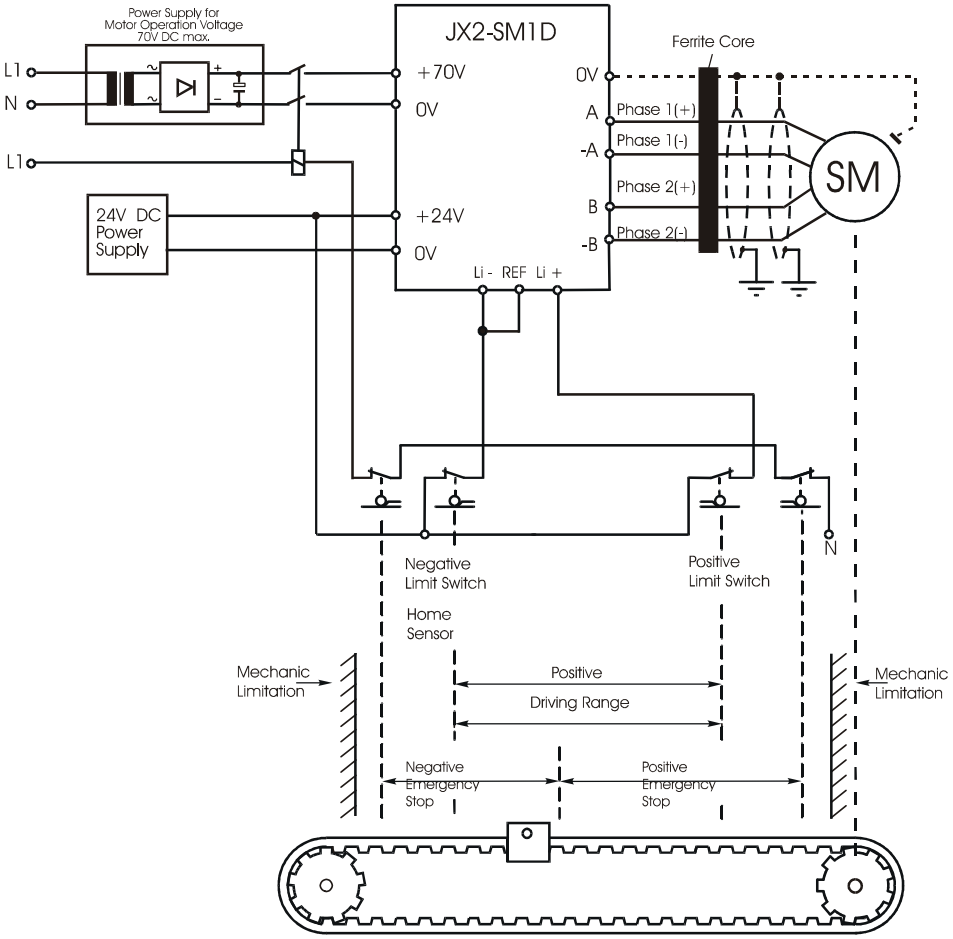

Figure 24: Exemplary application - wiring diagram

Task

The JX2-SM1D module is being initialised. After this, a reference run will be carried out.
Any error occurring will be indicated on a display.
After pressing function key F12, the reference run will be repeated.

After an error-free reference run, the control will be ready for positioning.

After pressing function key F6, a certain distance - see **Figure 25** - go -and return path - will be covered. In this case, the axis will run into a so-called collision range, i.e. a second axis will run over this range as well.
In the collision range, the axis may only run at a reduced speed.

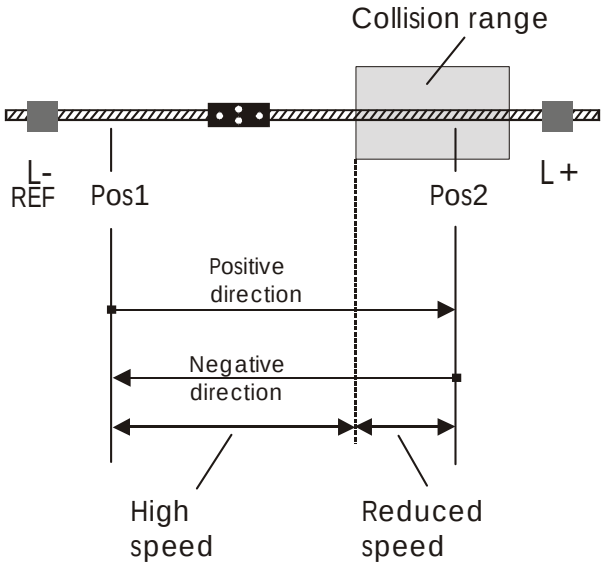

Figure 25: Distance in the exemplary application

Program

TASK 1

; Initialising of the JX2-SM1D. It has been plugged into slot 2.

```
    THEN
; Important!
; Load the motor current
; Value: 3,2 Ampere
        REGISTER_LOAD [12122 with 9]

; Set the step resolution
; Value: 1/4-step operation
        REGISTER_LOAD [12123 with 4]

; Set the start/stop frequency, e.g. 600Hz
        REGISTER_LOAD [12108 with 600]

; Set the acceleration ramp, e.g. 200 Hz/4ms
```

```
        REGISTER_LOAD [12105 with 200]

; Set the deceleration ramp, e.g. 200 Hz/4ms
        REGISTER_LOAD [12106 with 200]

; Set the polarities of home sensor and limit switch
; The home sensor is 24V active. The two limit switches are
; 0V active
        REGISTER_LOAD [12104 with 2]

; Activate the amplifier by giving a command. From now on, the
; axis can be moved.
        REGISTER_LOAD [12101 with 1]
```

Initialising is finished. A reference run is started now.

```
LABEL 40

; Set the nominal speed
; The step frequency is to equal the set start/stop frequency
        REGISTER_LOAD [12103 with 600]

; Carry out the reference run
        REGISTER_LOAD [12101 with 12]

; Wait, until the reference run is finished. For this purpose, status
; register bit 13 is queried.
  WHEN
        BIT_CLEAR [Reg=12100, Bit=13]
    THEN

; Check, whether an error occurred during reference run
  IF
        BIT_SET [Reg=12100, Bit=12]
    THEN
        DISPLAY_TEXT [#0; cp=1, "Check home
                            sensor"]
        DISPLAY_TEXT [#0; cp=25, "Continue by
                        pressing F12"]
        GOTO 41
  ELSE
        GOTO 42

LABEL 41
  WHEN
        FLAG fKeyF12        ; Flag 2212
    THEN
        GOTO 40

LABEL 42
```

```
; Wait, until start key (function key F6) has been pressed
  WHEN
      FLAG fKeyF6        ; Flag 2206
    THEN
; Drive towards destination
; The axis is driving onto Pos2, e.g. 80000
; First drive in higher speed
      POS [axis=21, Pos=80000, v=15000]
; Drive into collision range
  WHEN
      REG 12109     ; present
                         actual position
      >
      60000
    THEN
; Reduce speed
      REGISTER_LOAD [12103 with 5000]

; Axis is in position 80000
  WHEN
      AXARR axis=21

; Return drive
; Axis is driving onto position POS1, e.g. 500
; Reduce speed because of being in the collision range
    THEN
      POS [axis=21, Pos=500, v=5000]
; Drive out of the collision range
  WHEN
      REG 12109     ; present
                         actual position
      <
      60000
    THEN
; Increase speed
      REGISTER_LOAD [12103 with 15000]

; Axis is in position 500
  WHEN
      AXARR axis=21

; GOTO label 42
    THEN
GOTO 42
```

Appendix

Appendix A: Glossary

Absolute Positioning	Reference point: Position of the home sensor
Analogue	A parameter, e.g. voltage, which is steplessly adjustable. Contrary to digital.
Drive	A stepper motor is an electric motor. An electric motor belongs to the category of drives.
Bipolar Winding	The part-windings have been wired internally in the motor. In contrast to unipolar winding only two connections per phase will be needed. For controlling, a bridge circuit will be needed.
System Bus	Serves logic connection of the modules.
Digital	Binary presentation of a parameter, e.g. time. In digital presentation, this parameter can only be changed in defined steps, that is, in binary mode. This is contrary to analogue presentation.
Amplifier	Motor power supply.
Electro-Magnetic Compatibility	Definition according to the EMC regulations: "EMC is the ability of a device to function in a satisfactory way in electro-magnetic surroundings without causing electromagnetic disturbances itself, which would be unbearable for other devices in these surroundings."

ESR	Alternating current capacity of a condenser. ESR: Equivalent Series Resistor
Ferrite	Generally a magnetically soft material. Can especially be used for frequencies in the MHz range, as there is a minimum of hysteresis losses.
Low Voltage Regulations	To be considered when using electric devices of a rated voltage between 50 and 1000 V AC and between 75 and 1500 V DC.
Phase	see bipolar winding. In a stepper motor control, one phase corresponds to one motor winding. Further meaning: Phase of a network voltage, L1, L2, L3.
Phase current rated value	Maximum possible current of the motor winding.
Register	One high speed memory for a group of bits, placed in a microprocessor or in another electronic device, where data can be stored temporarily for a certain purpose. At Jetter AG, usually these are 24Bit wide storage positions in a remanent RAM.
Relative Positioning	Reference point: Latest nominal position
Oscillating Capacity	The device can, either permanently or as a shock, be exposed to oscillation defined by standard.
Hysteresis Loss	When the poles of a magnetic field are being changed, warmth will be produced in the magnetic material. This is not intended; the phenomenon is called hysteresis loss.
Ripple - Smoothness - Sifting	Ripple: AC overlapping DC. Sifting: Circuit configuration with an RC or LC component, in order to achieve more smoothness or a lower ripple of the direct voltage.
Intermediate Circuit Voltage	This is a direct voltage potential for the motor. Differences in the mains voltage are being equalised, while excess motor energies are being intercepted.

Appendix B: Abbreviations

AC	**A**lternating **C**urrent
CE	**C**ommunautés **E**uropéennes European Communities
DC	**D**irect **C**urrent
EMF	**E**lectro **M**otive **F**orce
EMC	**E**lectro **M**agnetic **C**ompatibility
EN	**E**uropäische **N**orm = European Standard
ESR	**E**quivalent **S**eries **R**esistor
Gnd	**G**rou**nd**
IEC	**I**nternational **E**lectrotechnical **C**ommission
LED	**L**ight - **E**mitting **D**iode
PE	**P**rotected **E**arth
SELV	**S**afe **E**xtra **L**ow **V**oltage: Voltage up to 60 V, galvanically separated from the network
SUB-D	Type name of a plug-in connector

Appendix C: Index of Illustrations

Appendix D: Index

H

I

L

M

N

O

P

R

S

T

V

W