Jetter automation

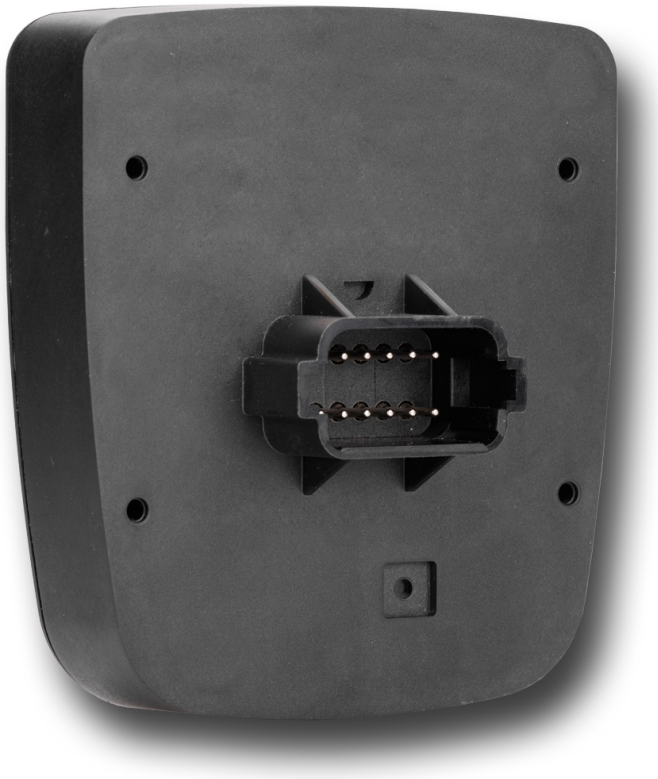

User Manual

JCM-501-E01

We automate your success.

Jetter AG
Graeterstrasse 2
71642 Ludwigsburg
Germany

Phone

Switchboard	+49 7141 2550-0
Sales	+49 7141 2550-531
Technical Hotline	+49 7141 2550-444

E-mail

Technical Hotline	hotline@jetter.de
Sales	sales@jetter.de

Translation of the original User Manual

Revision	4.08.1
Date of issue	1/29/2020

Table of contents

1 Introduction

1.1 Information on this document

This document forms an integral part of the product and must be read and understood prior to using it. It contains important and safety-related information for the proper use of the product as intended.

Target groups

This document is intended for specialists with appropriate qualifications.
Only competent and trained personnel is allowed to put this device into operation.
During the whole product life cycle, safe handling and operation of the device must be ensured. In the case of missing or inadequate technical knowledge or knowledge of this document any liability is excluded.

Availability of information

Make sure this document is kept at the ready in the vicinity of the product throughout its service life.
For information on new revisions of this document, visit the download area on our website. This document is not subject to any updating service.

Start | Jetter - We automate your success.

For further information refer to the following information products:

- Version updates
  Information about new versions of software products or of the operating system of your controller.
- Online help of the JetSym software
  Detailed description of software functions with application examples
- Application-oriented manuals
  Information on file systems and communication interfaces

1.2 Typographical conventions

This manual uses different typographical effects to support you in finding and classifying information. Below, there is an example of a step-by-step instruction:

✓ This symbol indicates requirements which have to be met before executing the following action.

► This sign or a numbering at the beginning of a paragraph marks an action instruction that must be executed by the user. Execute the instructions one after the other.

⇨ The target after a list of instructions indicates reactions to, or results of these actions.

More information on this subject is available on our website.

Start | Jetter - We automate your success.

ⓘ INFO	In the info box you will find helpful information and practical tips about your product.

2 Safety

2.1 General information

At the time of placing on the market, this product corresponds to the current state of the art and meets the recognized safety rules.
Besides this user manual, laws and regulations in the operator's country are relevant to the operation of the product. The operator is responsible for complying with the directives mentioned below:

- Applicable legislation, rules, and regulations
- Relevant accident prevention regulations
- Accepted safety rules
- EU directives and other country-specific regulations

2.2 Purpose

2.2.1 Intended use

The device is intended for controlling applications in the field of commercial vehicles and mobile machines.

Operate the device only in accordance with the intended conditions of use, and within the limits set forth in the technical specifications.
Intended use of the product includes its operation in accordance with this manual.

SELV/PELV

If this device is not used in a vehicle or mobile machine, a SELV or PELV power supply unit must be used to supply the device.

2.2.2 Usage other than intended

This device must not be used in technical systems which to a high degree have to be fail-safe.

Machinery Directive

This device is no safety-related part as per Machinery Directive 2006/42/EC, and must, therefore, not be used for safety-relevant applications. This device is NOT intended for the purpose of personal safety, and must, therefore, not be used to protect persons.

2.3 Warnings used in this document

⚠ DANGER	**High risk** Indicates an imminently hazardous situation which, if not avoided, will result in death or serious injury.
⚠ WARNING	**Medium risk** Indicates a potential hazardous situation which, if not avoided, could result in death or serious injury.
⚠ CAUTION	**Low risk** Indicates a hazardous situation which, if not avoided, could result in minor or moderate injury.
NOTICE	**Material damage** Indicates a situation which, if not avoided, could result in malfunctions or material damage.

3 Product description

The JCM-501-E01 controller forms the heart of compact, distributed architectures. With its numerous interfaces, as well as the proven, powerful 32-bit CPU, it can be used in system solutions of simple to medium complexity.

3.1 Design

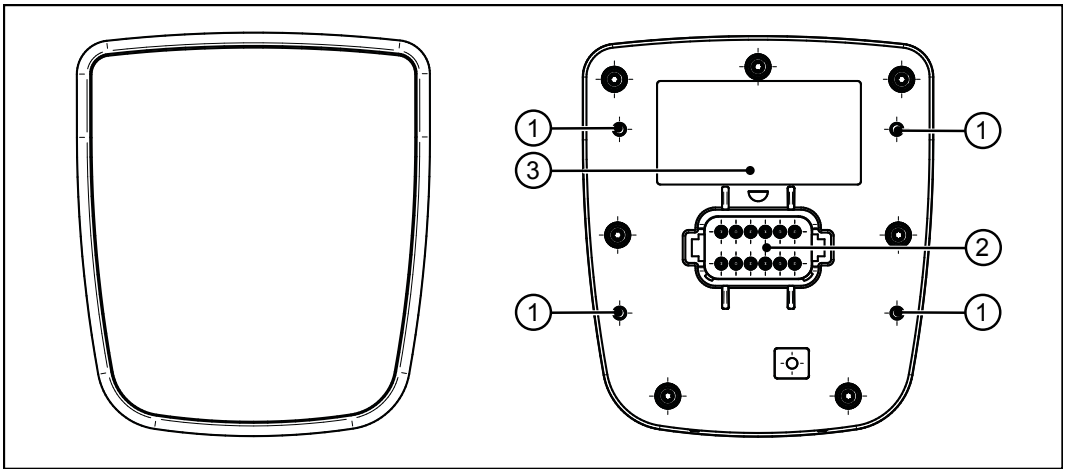

Fig. 1: Device configuration

1	Screw hole	2	Deutsch connector
3	Nameplate		

3.2 Features

- Deutsch connector DT06-12S
- Ports and interfaces: 2x CAN, 1x USB, 1x RS-232 (all in Deutsch connector)
- CPU: ARM11, 500 MHz, 128 MB RAM, 512 MB Flash
- Front/rear degree of protection: IP65/IP65:
- Integrated real-time clock

3.3 Status indication

The JCM-501-E01 has 2 LEDs which can be configured by the user.

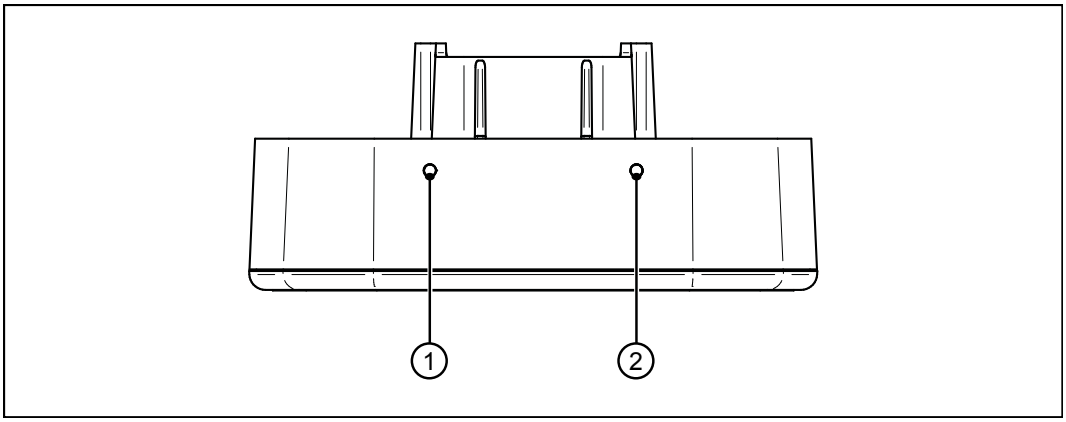

Fig. 2: Status indication

1	"D2" LED	2	"D1" LED

3.3.1 Diagnostics capabilities by means of status indication

Colors and flashing patterns of the LEDs are an excellent source of information to analyze problems.
Diagnostics via the setup window of the JetSym software is another option.

LED	Status	Color	Description
D2	OFF	---	This LED is controlled by register 108008. If bit 2 and bit 3 of register 108008 are 0 at the same time, the LED is off.
	ON	Red	Bit 3 is set in register 108008.
	ON	Green	Bit 2 is set in register 108008.
	ON	Orange	In register 108008, bits 2 and 3 are set simultaneously.
D1	OFF	---	This LED is controlled by register 108008. If bit 0 and bit 1 of register 108008 are 0 at the same time, the LED is off.
	ON	Red	Bit 1 is set in register 108008.
	ON	Green	Bit 0 is set in register 108008. The system is switched on (MR 108008=1).
	ON	Orange	In register 108008, bits 0 and 1 are set simultaneously.

3.4 Scope of delivery

Scope of delivery	Item number	Quantity
JCM-501-E01	10001818	1
Installation manual	60884762	1

3.5 Nameplate

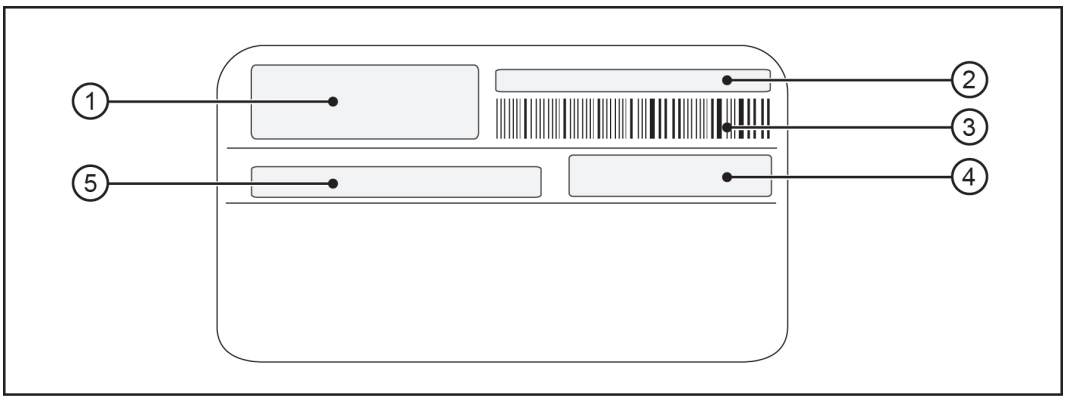

Fig. 3: Nameplate

1	Logo	2	Serial number
3	Barcode	4	Article number and hardware revision
5	Model code number		

4 Technical specifications

4.1 Dimensions

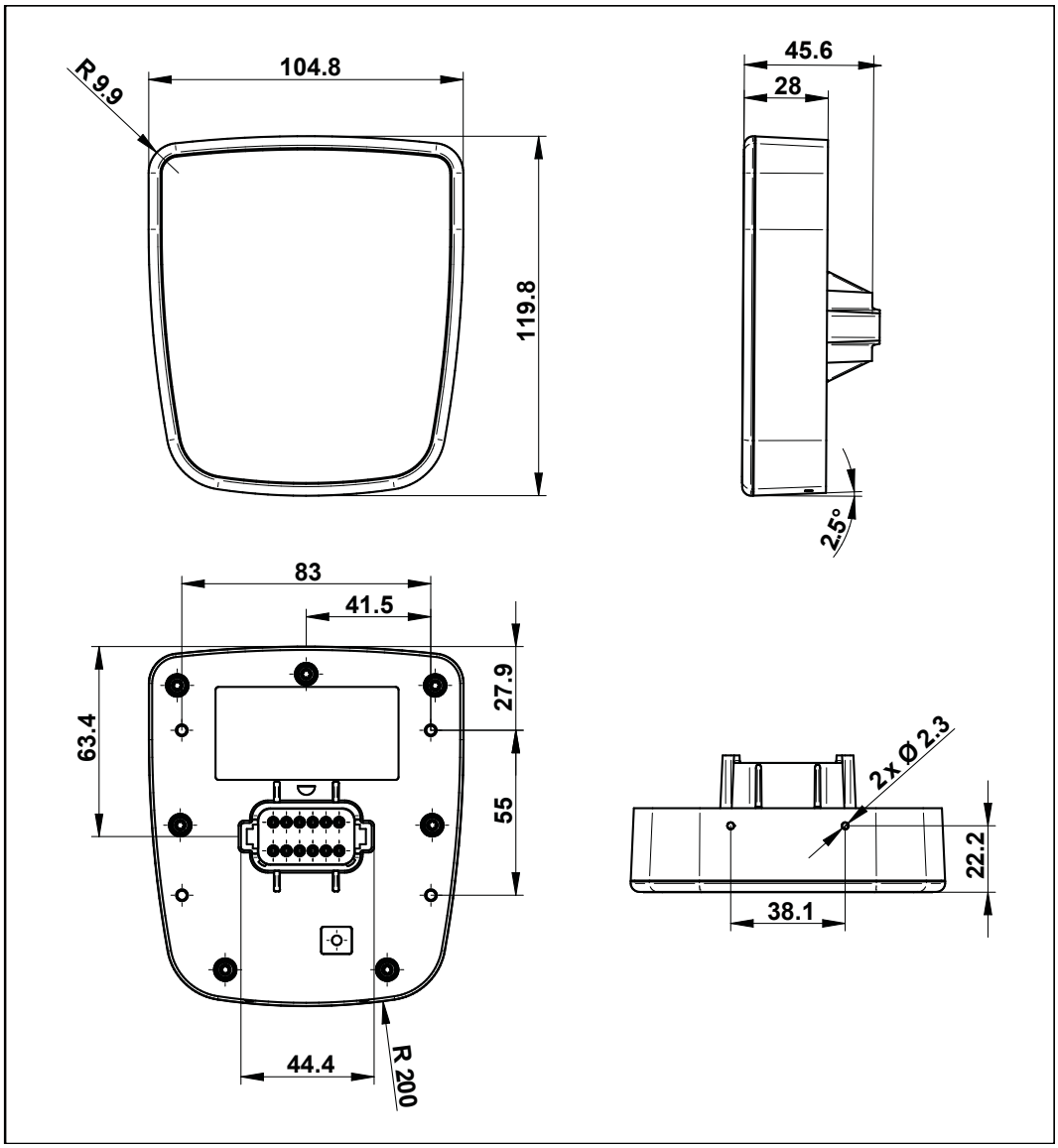

Fig. 4: Dimensions (in mm)

4.2 Electrical properties

Power supply VBAT_ECU

Category	Description
Rated voltage	DC 12 V or 24 V
Permissible voltage range VBAT_ECU	DC 8 V ... DC 32 V
Maximum current	2 A
Typical current consumption logic circuit (VBAT_ECU)	170 mA at DC 12 V 90 mA at DC 24 V
Power consumption	Approx. 2 W
Integrated protective functions	Reverse polarity protection, overvoltage, voltage surges

Tab. 1: Power supply VBAT_ECU

4.3 Mechanical specifications

Category	Description	Standards
Vibration		
Broadband noise	10 Hz / 0.005 $(m/s^2)^2/Hz$	DIN EN 60068-2-64
	200 Hz / 0.02 $(m/s^2)^2/Hz$	
	300 Hz / 0.01 $(m/s^2)^2/Hz$	
	350 Hz / 0.002 $(m/s^2)^2/Hz$	
Period	3x 24 h	
Shock resistance		
Type of shock	Half-sine wave	DIN EN 60068-2-27
Intensity and duration	30 g (300 m/s^2) for 18 ms	
Number and direction	18 shocks in all 6 directions	
Degree of protection		
Front panel:	IP65	DIN EN 60529
Rear panel:	IP65	

Tab. 2: Mechanical specifications

4.4 Environmental conditions

Category	Description	Standards
Operating temperature	-20 … +65 °C	ISO 16750-4
Climatic conditions	Humid heat	
Storage temperature	-20 … +70 °C	ISO 16750-4 DIN EN 60068-2-1 DIN EN 60068-2-2
Air humidity	10 … 95 %	DIN EN 61131-2
Pollution degree	2	DIN EN 61131-2

Tab. 3: Environmental conditions

4.5 Acoustic signal generator

Category	Description	
Type	Speakers	Adjustable frequency and volume.
Volume	83 dB	10 cm distance and resonance frequency 2.670 Hz

Tab. 4: Acoustic signal generator

4.6 Ports and interfaces

4.6.1 CAN port

CAN interfaces

Category	Description	
Quantity	2	CAN_1 and CAN_2
Baud rate	125, 250, 500 kBaud	
Protocol	CANopen®	SAE J1939
Default node ID on the CANopen® bus	127 (0x7F)	

Category	Description	
Bus terminating resistor	CAN 1	Internally not installed.
	CAN 2	Internally installed (120 Ω).
External bus termination	Required for CAN 1	120 Ω
Cable specification	Twisted pair conductors, unshielded	

Tab. 5: CAN interfaces

Specification - CAN bus cable

Category	Description
Wire cross-section	500 kBaud: 0.34 … 0.50 mm^2 250 kBaud: 0.34 … 0.60 mm^2
Cable capacitance	60 pF/m max.
Resistivity	500 kBaud: Max. 60 Ω/km. 250 kBaud: Max. 60 Ω/km.
Number of cores	2
Twisting	CAN_L and CAN_H cables are twisted pairwise

Tab. 6: Specification - CAN bus cable

Line lengths

The maximum permitted cable length depends on the baud rate used and the number of CANopen® devices connected.

Baud rate	Max. line length	Max. stub line length	Total line length
500 kBaud	100 m	5 m	30 m
250 kBaud	250 m	10 m	60 m

Tab. 7: Line lengths

4.6.2 USB interface

ⓘ INFO

The USB port does not meet the immunity requirement of the E1 directive. Therefore, use the USB port only for service purposes and not while the unit is in operation.

Category	Description
Supply unit	5 V, 500 mA max.
Data rate	USB 2.0
High-speed type	480 MBaud max.
Protocol	USB host interface
Line length limitation	30 cm

Tab. 8: USB interface

4.6.3 RS-232 interface

Category	Description	
Baud rates	Up to 115,200 baud	8N1
Connection topology	1x Deutsch connector socket	

Tab. 9: RS-232 interface

4.7 EMI values

The JCM-501-E01 has E1 approval according to ECE R10 Rev. 5 and CE conformity according to ISO 14982.

ⓘ INFO

The USB port does not meet the immunity requirement of the E1 directive. Therefore, use the USB port only for service purposes and not while the unit is in operation.

Pulses to ISO 7637-2

Test pulse	Values	Functional class
1	-450 V	C
2a	+37 V	A
2b	+20 V	C
3a	-150 V	A
3b	+150 V	A
4	Ua1: -12 V / 50 ms Ua2: -5 V / 500 ms	A (24 V systems)
	Ua1: -6 V / 15 ms Ua2: -2.5 V / 1000 ms	C (12 V systems)

Tab. 10: Pulses to ISO 7637-2

Irradiation to ISO 11452

Parameter	Values	Functional class
Protection against RF noise	20 MHz ... 2 GHz 30 V/m	A

Tab. 11: Irradiation to ISO 11452

ESD EN 61000-4-2

ESD EN 61000-4-2	Values	Functional class
Contact discharge	±4 kV (to conductive surfaces)	A
Discharge through air	±8 kV (to insulating surfaces)	A

Tab. 12: ESD EN 61000-4-2

5 Mechanical installation

NOTICE

Damages to material or functional impairment

Welding on the chassis may cause damages to material of the device, or impair its functions.

- ► Before you start welding, disconnect all connections between the device and the electric system of the vehicle.
- ► Protect the device from flying sparks and welding beads (splatter).
- ► Do not touch the device with the welding electrode or earth clamp.

5.1 Requirements for the installation location

The installation location must meet the following requirements:

- The installation location must allow air to circulate.
- The installation location must be of sufficient size.
- The device must be easily accessible to allow for service work.

Space required for installation and service

It should be possible to disconnect the connectors at any time.

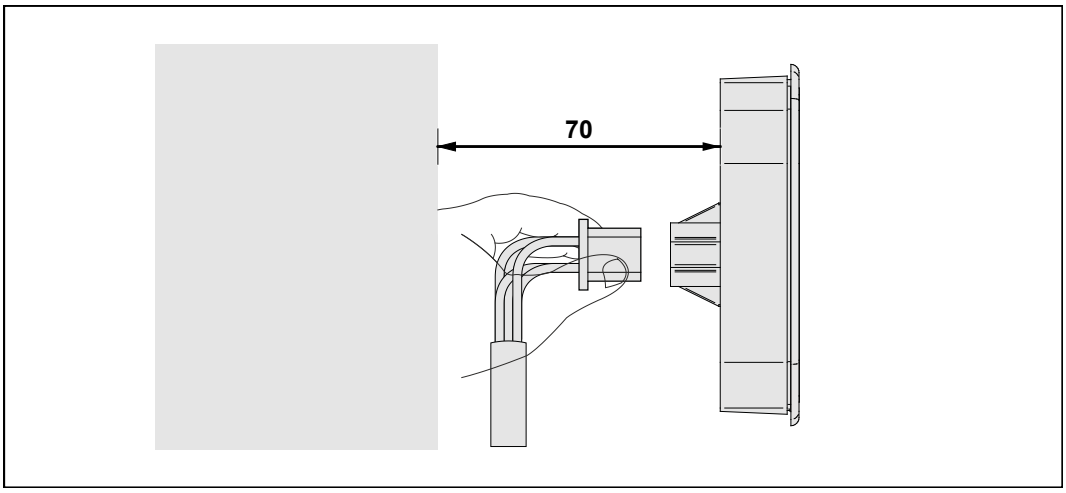

Fig. 5: Space requirements for installation work (in mm)

Avoiding unsuitable installation locations

The following installation locations are unsuitable for mounting the device:

Unsuitable installation location	Reason
Outdoor installation	The device must not be exposed to rain or a jet of water. Do not use a steam jet or other such devices to clean the device.
Installation location close to heat-sensitive materials	The materials could become warped or misshapen as a result of heat produced by the device.

Tab. 13: Unsuitable installation locations

5.2 Installing the control

Screw holes

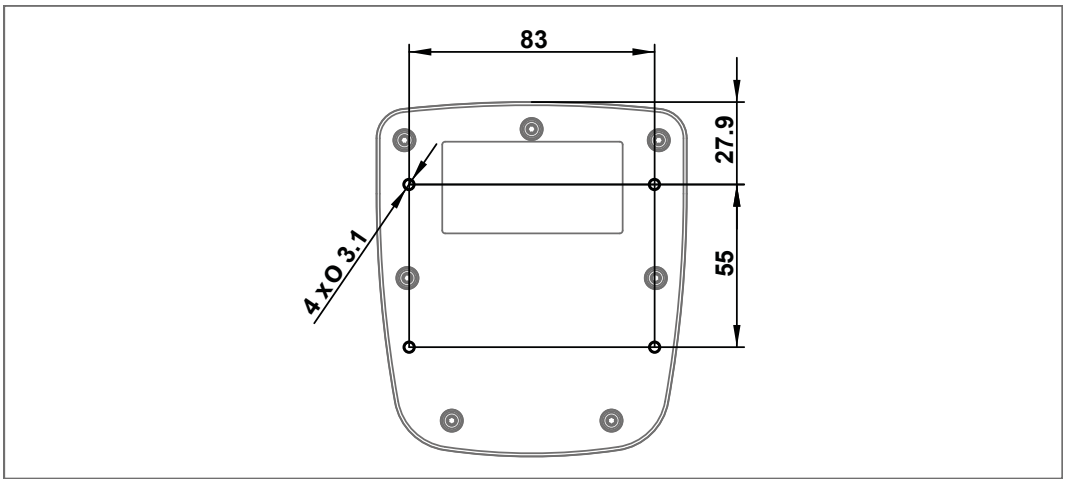

Fig. 6: All dimensions of screw holes are in millimeters.

Installing the strain relief

Install strain reliefs for the connecting cables.

- Ensure that there is sufficient clearance between the strain reliefs and the connectors.
- Connectors must not be obstructed, so that they can be removed in the event of service.

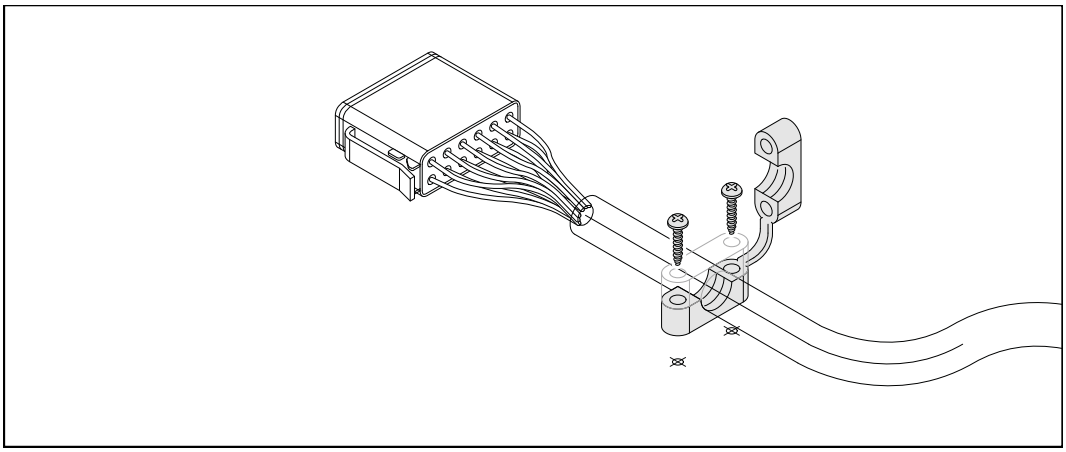

Fig. 7: Installing the strain relief

6 Electrical connection

NOTICE

Damages to material or functional impairment

Improper implementation of the wiring harness may cause mechanical stress.

- ► Protect the cables from bending, twisting or chafing.
- ► Install strain reliefs for the connecting cables.

NOTICE

Surges resulting from missing protection or fusing

Surges may cause malfunctions or damage to the product.

- ► Protect the voltage inputs from surges according to the requirements.
- ► Ensure that the device is handled in accordance with ESD regulations.

6.1 Pin assignment of Deutsch connector

Features

The Deutsch connector has the following functions:

- Power supply to the JCM-501-E01
- CAN communication
- USB
- RS232

ⓘ INFO

Current consumption

When the JCM-501-E01 is energized, the current consumption is temporarily higher. To ensure a reliable start-up of the device, provide at least 3 times the typical current required.

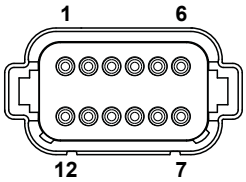

Fig. 8: Deutsch connector, 12 pins

12	CAN_2_H	1	GND
11	CAN_2_L	2	USB_+5V
10	CAN_1_H	3	USB_D+
9	CAN_1_L	4	USB_D-
8	RXD_RS232	5	GND
7	TXD_RS232	6	VBAT_ECU

Mating parts

Compatible mating parts for the 12-pin DEUTSCH connector are as follows:

Category	Description
Manufacturer	Deutsch
Manufacturer item number - Housing	DT06-12S
Manufacturer item number - Wedgelock	W12S
Manufacturer item number - Crimp contact (receptacle)	0-462-201-16141
Wire size range	1.0 ... 1.5 mm^2(AWG 18 ... 16)

7 Programming

7.1 Abbreviations, module register properties and formats

Abbreviations

The abbreviations used in this document are listed in the table below:

Abbreviation	Description
R 100	Register 100
MR 150	Module register 150

Tab. 14: Abbreviations

Module register properties

Each module register is characterized by certain properties. For many module registers most properties are identical. For example, their value after reset is 0. In the following description, module register properties are mentioned only if a property deviates from the default properties listed below.

Property	Standard design
Type of access	Read/write
Value after reset	0 or undefined (e.g. revision/version number)
Takes effect	Immediately
Write access	Always
Data type	Integer

Tab. 15: Module register properties

Numerical formats

The numerical formats used in this document are listed in the table below:

Notation	Format of numerical values
100	Decimal
0x100	Hexadecimal
0b100	Binary

Tab. 16: Numerical formats

JetSym sample programs

The notation for sample programs used in this document is listed in the table below:

Notation	Format of numerical values
`Var`, `When`, `Task`	Keyword
`BitClear();`	Commands
`100 0x100 0b100`	Constant numerical values
`// This is a comment`	Comment
`// ...`	Further program processing

Tab. 17: JetSym sample programs

7.2 CANopen® STX API

CANopen® is an open standard for networking and communication, e.g. in the automotive sector. The CANopen® protocol has been further developed by the CiA e.V. (CAN in Automation) and works on the physical layer with CAN Highspeed in accordance with ISO 11898.

Specifications

The CANopen® specifications can be obtained from the **CiA e.V.** homepage at *http://www.can-cia.org*.
The key specification documents are:

- CiA DS 301 - This document is also known as the communication profile and describes the fundamental services and protocols used under CANopen®.
- CiA DS 302 - Framework for programmable devices (CANopen® Manager, SDO Manager)
- CiA DR 303 - Information on cables and connectors
- CiA DS 4xx - These documents describe the behavior of a number of device classes in, what are known as, device profiles.

7.2.1 STX Functions

Application

STX functions are used in the communication between the JCM-501-E01 and other CANopen® nodes.

The JCM-501-E01 supports the following STX functions:

Features	Description
`CanOpenInit()`	The function `CanOpenInit()` lets you initialize one of the CAN busses.
`CanOpenSetCommand()`	The function `CanOpenSetCommand()` lets you change the heartbeat status of the device itself and of all other devices (NMT slaves) on the CAN bus.
`CanOpenUploadSDO()`	The function `CanOpenUploadSDO()` lets you access a particular object in the Object Directory of the message recipient and read the value of the object. Data is exchanged in accordance with the SDO upload protocol.
`CanOpenDownloadSDO()`	The function `CanOpenDownloadSDO()` lets you access a particular object in the Object Directory of the message recipient and specify the value of the object. Data is exchanged in accordance with the SDO download protocol.
`CanOpenAddPDORx()`	By calling up the `CanOpenAddPDORx()` function, process data, sent by other CANopen® devices, can be entered for reception.
`CanOpenAddPDOTx()`	By calling up the `CanOpenAddPDOTx()` function, process data can be placed on the bus.

ⓘ INFO

Further information about STX functions can be found in the application-oriented manual "CANopen® STX-API" on our *homepage* and in the JetSym online help.

7.2.2 Heartbeat monitoring

The heartbeat protocol is for monitoring the activity of communication partners. If the inactivity exceeds the set interval (Heartbeat consumer time), the status is set to "**offline**".

The application program lets you define heartbeat functions, such as

- Displaying information to the user
- Rebooting the device
- Ignoring process data

ⓘ INFO

Further information about this subject can be found in the topic "Heartbeat monitoring" in the application-oriented manual "CANopen®-STX-API" on our *homepage*.

7.2.3 CANopen® Object dictionary

The operating system of the JCM-501-E01 supports the following objects:

Index (hex)	Object (code)	Object name	Data type	Type of access
1000	VAR	Device type	Unsigned32	RO (read only)
1001	VAR	Error Register	Unsigned8	RO
1002	VAR	Manufacturer status	Unsigned32	RO
1003	ARRAY	Pre-defined error field	Unsigned32	RO
1008	VAR	Manufacturer Device Name	String const	1008
1009	VAR	Manufacturer Hardware Version	String const	1009
100A	VAR	Manufacturer Software Version	String const	100A
100B	VAR	Node ID	Unsigned32	RO
1017	VAR	Producer Heartbeat Time	Unsigned16	R/W (read & write)
1018	RECORD	Identity	Identity	RO
1200	RECORD	Server 1 - SDO parameter	SDO parameter	RO
1201	RECORD	Server 2 - SDO parameter	SDO parameter	R/W
1203	RECORD	Server 3 - SDO parameter	SDO parameter	R/W
1203	RECORD	Server 4 - SDO parameter	SDO parameter	R/W

ⓘ INFO

Further information about this subject can be found in the topic "CANopen® Object Directory" in the application-oriented manual "CANopen® STX-API" on our *homepage*.

7.3 SAE J1939 STX API

SAE J1939 is an open standard for networking and communication in the commercial vehicle sector. The focal point of the application is the networking of the power train and chassis. The J1939 protocol originates from the international **Society of Automotive Engineers (SAE)** and works on the physical layer with CAN high-speed according to ISO 11898.

Specifications

The SAE J1939 specifications can be obtained from the SAE homepage *http://www.sae.org*.

The key SAE J1939 specifications are:

- J1939-11 - Information on the physical layer
- J1939-21 - Information on the data link layer
- J1939-71 - Information on the application layer vehicles
- J1939-73 - Information on the application layer range analysis
- J1939-81 - Network management

ⓘ INFO

For more information on SAE J1939 STX API refer to the application-oriented manual "SAE J1939 STX API" available for download on our *homepage*.

7.3.1 STX Functions

Application

STX functions are used in the communication between the JCM-501-E01 and other devices in a vehicle.

The JCM-501-E01 supports the following STX functions:

Features	Description
`SAEJ1939Init()`	By calling the SAEJ1939Init() function `SAEJ1939Init()`, one of the existing CAN busses (not CAN 0 because it is reserved for CANopen®) is initialized for the J1939 protocol.
`SAEJ1939SetSA()`	The function `SAEJ1939SetSA()` lets you change your own SA (Source Address) during runtime.
`SAEJ1939GetSA()`	The function `SAEJ1939GetSA()` lets you determine your own SA (Source Address).
`SAEJ1939AddRx()`	Calling up the function `SAEJ1939AddRx()` prompts the JCM-501-E01 to receive a specific message.
`SAEJ1939AddTx()`	Calling up the function `SAEJ1939AddTx()` prompts the JCM-501-E01 to cyclically send a specific message via the bus.
`SAEJ1939RequestPGN()`	Calling up the function `SAEJ1939RequestPGN()` sends a request to the DA (Destination Address) following a PGN.
`SAEJ1939GetDM1()`	Calling up the function `SAEJ1939GetDM1()` requests the current diagnostics error codes (also see SAE J1939-73 No. 5.7.1).
`SAEJ1939GetDM2()`	Calling up the function `SAEJ1939GetDM2()` requests the diagnostics error codes that preceded the current ones (also see SAEJ1939-73 No. 5.7.2).

Features	Description
`SAEJ1939 SetSPNConversion()`	Calling up the function `SAEJ1939SetSPNConversion()` defines the arrangement of bytes in the message which is requested by the `SAEJ1939GetDM1()` or `SAEJ1939GetDM2()` function.
`SAEJ1939 GetSPNConversion()`	Calling up the function `SAEJ1939GetSPNConversion()` determines the currently set conversion method.

ⓘ INFO

For more information on the subject STX API Functions refer to the application-oriented manual "SAE J1939 STX API" available for download on our *homepage*.

7.4 Serial interface RS-232

The JCM-501-E01 has a user-programmable RS-232 interface.

7.4.1 Operating principle

The OS provides a receive buffer and a transmit buffer for the user-programmable serial interface. These buffers can be used to adjust the transfer rate between application program and serial interface.

Block diagram

The following illustration shows the block diagram of the user-programmable serial interface:

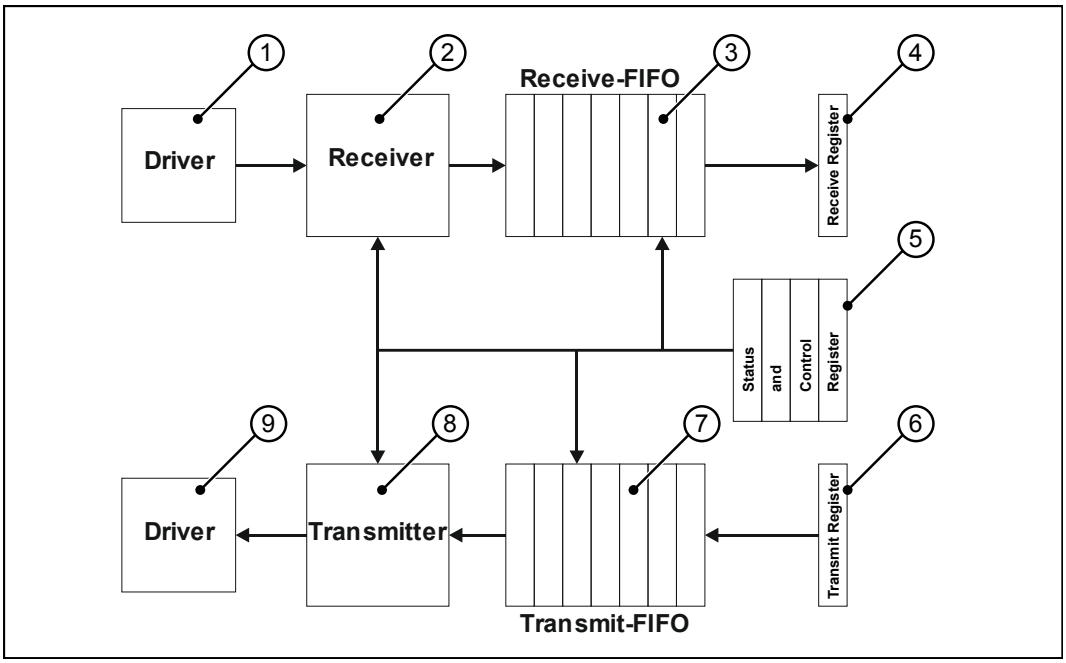

Fig. 9: Block Diagram - Serial Interface

Elements of the interface

The user-programmable serial interface consists of the following elements:

Number	Section	Features
1	Interface driver	Converts the signals of the interface into internal signal levels
2	Addressee	Performs serial/parallel conversion
3	Receive buffer	Buffer for received characters

Number	Section	Features
4	Receive register	Read access to this register reads the received characters in the receive buffer (3).
5	Interface driver	Converts internal signal levels into interface signals.
6	Transmitter	Performs parallel/serial conversion
7	Sending buffer	Buffer for characters to be sent
8	Transmit register	Write access to this register causes the characters to be entered into the transmit buffer (7) and to be sent by the transmitter (6).
9	Status and control register	Query of filling levels and error states of buffers; setting of transmission parameters

Tab. 18: Elements of the serial interface

Receiving a character

Receiving a character is done in 4 steps:

Step	Description
1	The interface driver converts signals "on the line" into internal signal levels and forwards them to the receiver.
2	The receiver performs serial/parallel conversion of this character and checks the set communication parameters.
3	The receiver enters the character into the receive buffer if there is any place left. Otherwise, the character is discarded and buffer overflow is signaled.
4	Via receive register the character can be read out of the receive buffer.

Sending a character

A character is sent in 4 steps:

Step	Description
1	Via transmit register the character is entered into the transmit buffer if there is any place left. Otherwise the character is discarded.
2	Once the transmitter has sent a character, it reads the next character from the transmit buffer.
3	The transmitter performs parallel/serial conversion and sends this character to the interface driver using the set communication parameters.
4	The interface driver converts internal signal levels into the various interface standards

Error detection

When receiving characters, the following errors are detected by the controller and displayed in the register *Error state*:

Errors	Description	Effect
Framing error	The format of the received character does not match the set parameters.	The erroneous character(s) is (are) stored in the receive buffer and error bit *Framing error* is set. The error counter is incremented.

Errors	Description	Effect
Parity error	The parity bit of the received character is not correct.	The erroneous character is stored in the receive buffer and error bit *Parity error* is set. The error counter is incremented.
Buffer overflow	A character is received, although the receive buffer is full.	The character is discarded and error bit *Overflow* is set. The error counter is incremented.

Troubleshooting

As error bits cannot be assigned to individual characters in the receive buffer, all characters should be removed from the receive buffer and discarded when an error bit is set.

Possible causes of error and troubleshooting:

Errors	Possible cause	Troubleshooting
Framing error	Jammed data transmission caused by EMC problems, defective cables or connectors	■ Check the wiring and connectors. ■ Use shielded cables. ■ Do not lay cables near sources of interference.
	Incorrectly set communication parameters (baud rate, number of stop bits, etc.)	■ Make sure the set communication parameters are consistent with the settings of the connected device.
Parity error	Jammed data transmission caused by EMC problems, defective cables or connectors	■ Check the wiring and connectors. ■ Use shielded cables. ■ Do not lay cables near sources of interference.
	Incorrectly set parity	■ Make sure the parity setting is consistent with the setting of the connected device.
Buffer overflow	The external device sends characters at too high a rate and the application program is not able to read them out of the receive buffer in due time.	■ Program a software handshake. ■ Set a lower baud rate. ■ Make sure that characters are read out from the receive buffer faster. To achieve this the program code has to be optimized.

7.4.2 Registers - Description

This chapter describes the registers associated with the user-programmable serial interface. These registers are used for the following tasks:

- Parameterizing the interface
- Sending characters
- Receiving characters

Register numbers

The registers of the interface are combined into one register block. The basic register number of this block is dependent on the device.

Device	Basic register number	Register numbers
JCM-501-E01	103100	103100 … 103119

Tab. 19: Register numbers of the serial interface

Determining register numbers

In this chapter, only the last two figures of a register number are specified. e.g. MR 14. To calculate the complete register number, add the basic register number of the corresponding device, e.g. 103100, to the module register number.

ⓘ INFO

When entering values into registers MR 1 through MR 6, the entire interface is re-initialized and the transmit and receive buffers are cleared.

MR 1

Protocol

This register lets you set the protocol which is supported by the OS of the controller. That is, this register is for defining how the interface is used.

Property	Description	
Values	1	System logger
	2	User-programmable interface
	3	PcomX
Value after reset	3	

Tab. 20: Protocol

MR 2

Baud rate

This register lets you set the baud rate.

Property	Description
Values	2,400 ... 115,200
Value after reset	9,600

Tab. 21: Baud rate

MR 3

Number of data bits per character

This register lets you set the number of data bits per character.

Property	Description
Values	5, 6, 7, 8
Value after reset	8

Tab. 22: Number of data bits per character

MR 4

Stop bits

This register lets you set the number of stop bits per character.

Property	Description	
Values	1	1 stop bit
	2	1.5 stop bits if MR 3 = 5 2 stop bits if MR 3 = 6, 7, 8
Value after reset	1	

Tab. 23: Stop bits

MR 5

Parity

This register lets you set the parity of a character.

Property	Description	
Values	0	None (no parity)
	1	Odd parity
	2	Even parity
	3	1 (mark)
	4	0 (space)
Value after reset	2	

Tab. 24: Parity

MR 7

Activating the serial interface

This register lets you activate the serial interface.

Property	Description	
Values	0	The serial interface is inactive, no data can be received/transmitted.
	1	The serial interface is active, data can be received/transmitted.
Value after reset	0	

Tab. 25: Activating the serial interface

MR 10

Sending buffer

The character that has to be sent must be entered into this register.

- If the sending buffer is able to accommodate the character, it is entered into this buffer. This character will be sent once all previously entered characters have been sent.
- Prior to sending characters from the application program, it must be checked whether the sending buffer is able to accommodate characters. This can be checked by reading out MR 11.
- The sending buffer functions according to the FIFO principle. The first character entered is sent first.

Property	Description	
Values	0 ... 31	5 bits per character
	0 ... 63	6 bits per character
	0 ... 127	7 bits per character
	0 ... 255	8 bits per character
Type of access	Read	Character written last
	Write access	Sending a character

Tab. 26: Sending buffer

MR 11

Sending buffer filling level

This register shows how many characters the sending buffer accommodates.

There is space for 32,768 characters max. within the buffer.

Property	Description
Values	0 ... 32,768

Tab. 27: Sending buffer filling level

MR 12

Receive buffer, 8 bits (without deleting the character on reading)

This register shows the "oldest" character stored in the receive buffer. On reading, this character will not be removed from the buffer.

Property	Description	
Values	0 ... 31	5 bits per character
	0 ... 63	6 bits per character
	0 ... 127	7 bits per character
	0 ... 255	8 bits per character
Type of access	Read	Oldest character in buffer
Takes effect	if MR 14 > 0	

Tab. 28: Receive buffer, 8 bits (without deleting the character on reading)

MR 13

Receive buffer, 8 bits (with deleting the character on reading)

This register shows the "oldest" character stored in the receive buffer. This character is removed from the buffer. Thus, the character received next can be read out during the next read access.

Property	Description	
Values	0 ... 31	5 bits per character
	0 ... 63	6 bits per character
	0 ... 127	7 bits per character
	0 ... 255	8 bits per character
Type of access	Read	Oldest character in buffer
Takes effect	if MR 14 > 0	

Tab. 29: Receive buffer, 8 bits (with deleting the character on reading)

MR 14

Receive buffer filling level

This register shows how many characters the receive buffer accommodates. Each read access to MR 13 decrements this register by 1.

Property	Description
Values	0 ... 32,768

Tab. 30: Receive buffer filling level

MR 15

Receive buffer, 16-bit, little endian

Read access to this register removes 2 characters from the receive buffer and returns them as 16-bit value.

Assignment:

Character	Bits in register
First	Bit 0 ... 7
Second	Bit 8 ... 15

Property	Description	
Values	0 ... 65,535	
Type of access	Read	Removes 2 characters from the buffer
Takes effect	if MR 14 > 1	

Tab. 31: Receive buffer, 16-bit, little endian

MR 16

Receive buffer; 16-bit; big endian

Read access to this register removes 2 characters from the receive buffer and returns them as 16-bit value.

Assignment:

Character	Bits in register
First	Bit 8 ... 15
Second	Bit 0 ... 7

Property	Description	
Values	0 ... 65,535	
Type of access	Read	Removes 2 characters from the buffer
Takes effect	if MR 14 > 1	

Tab. 32: Receive buffer; 16-bit; big endian

MR 17

Receive buffer, 32-bit, little endian

Read access to this register removes 4 characters from the receive buffer and returns them as 32-bit value.

Assignment:

Character	Bits in register
First	Bit 0 ... 7
Second	Bit 8 ... 15
Third	Bit 16 ... 23
Fourth	Bit 24 ... 31

Property	Description	
Values	-2,147,483,648 ... 2,147,483,647	
Type of access	Read	Removes 4 characters from the buffer
Takes effect	if MR 14 > 3	

Tab. 33: Receive buffer, **32-bit, little endian**

MR 18

Receive buffer; 32-bit; big endian

Read access to this register removes 4 characters from the receive buffer and returns them as 32-bit value.

Assignment:

Character	Bits in register
First	Bit 24 ... 31
Second	Bit 16 ... 23
Third	Bit 8 ... 15
Fourth	Bit 0 ... 7

Property	Description	
Values	-2,147,483,648 ... 2,147,483,647	
Type of access	Read	Removes 4 characters from the buffer
Takes effect	if MR 14 > 3	

Tab. 34: Receive buffer; **32-bit; big endian**

MR 19

Error counter

This register shows the number of detected errors.

Property	Description
Values	0 ... 2,147,483,647
Type of access	Read/write (clearing)

Tab. 35: Error counter

7.4.3 Programming

7.4.3.1 Activating the serial interface

Module register MR 7 lets you activate the user-programmable serial interface.

Configuring the interface

✓ The JCM-501-E01 and the device to communicate with have been wired according to the RS-232 interface standard.

► Enter value 1 into MR 7.

⇨ The serial interface is activated.

7.4.3.2 Configuring the serial interface

Module registers MR 1 through MR 6 are used to configure the user-programmable serial interface.

Configuring the interface

✓ The JCM-501-E01 and the device to communicate with have been wired according to the RS-232 interface standard..

1. Enter value 2 into MR 1.
2. Enter the desired communication parameters into MR 2 through MR 6.

⇨ The serial interface is set as a user-programmable interface. Transmit and receive buffer are cleared.

7.4.3.3 Sending characters

A character is sent by entering it into the register *Transmit buffer*.

Sending characters

✓ The user-programmable serial interface is configured.

1. Check the transmit buffer filling level, whether there is enough space in the transmit buffer.
2. If there is no space in the transmit buffer, wait, until there is enough space.
3. Enter the character to be sent into register *Transmit buffer*.

⇨ The character is written into the transmit buffer and will be sent from there.

7.4.3.4 Receiving characters

A character is received by reading characters from register *Receive Buffer*.

Receiving characters

✓ The user-programmable serial interface is configured.

1. Check the filling level of the receive buffer to make sure that it contains at least 1 character.
2. Read the character from the register *Receive buffer*.

⇨ The character is taken from the receive buffer.

7.4.3.5 Sending Texts

An easy way to send texts via user-programmable serial interface is redirecting the instructions `DisplayText()` and `DisplayText2()` to **Device 9**.

Restrictions

When redirecting the instructions `DisplayText()` and `DipslayText2()` to the user-programmable serial interface the following restrictions apply:

- The cursor position will not be taken into account.
- The characters for "Delete Screen" and "Delete to End of Line" are of no special significance and will be output without any changes.

Sending Texts

✓ The user-programmable serial interface is configured.

✓ The user is familiar with the options of the instructions `DisplayText()` and `DisplayText2()` (refer to the online help which comes with JetSym).

1. Use the instruction `DisplayText()` or `DisplayText2()`.
2. Specify **Device 9**.

⇨ The task waits at this instruction until all characters have been entered into the transmit buffer.

7.4.3.6 Sending values

A simple way to send values via user-programmable serial interface is to redirect the `DisplayValue()` command to **Device 9**.

Restrictions

When redirecting instruction `DisplayValue()` to the user-programmable serial interface, the following restriction applies:

- The cursor position will not be taken into account.

Sending values

✓ The user-programmable serial interface is configured.

✓ The user is familiar with the options of the instruction `DisplayValue()` (refer to the online help which comes with JetSym).

1. Set the special registers for formatting the display, which are used in connection with the instruction `DisplayValue()`, to the desired values.
2. Use the instruction `DisplayValue()`.
3. Specify **Device 9**.

⇨ The task waits at this instruction until all characters have been entered into the transmit buffer.

7.4.3.7 Receiving values

Values are received by reading characters from registers MR 15 through MR 18 *Receive buffer registers*.

Receiving values

✓ The user-programmable serial interface is configured.

1. Check the filling level of the receive buffer to make sure that it contains at least 2 or 4 characters.
2. Read the values from *Receive buffer* registers MR 15 through MR 18.

⇨ The characters are read from the receive buffer.

7.5 Real-time clock

A real-time clock is used for time measurement. If there is a permanent connection between ECU_PWR of the controller and the vehicle battery, the real-time clock will continue to run for a certain period of time even when the controller is switched off. The real-time clock has no automatic daylight savings time function.

The JCM-501-E01 has a built-in battery with a service life of at least 10 years.

7.6 File system

The file system lets you access files located on the internal flash disk or an USB flash drive. When problems occur, a good understanding of the file system is very helpful.

NOTICE

Malfunctions caused by missing or damaged system files.

Careless handling of system files may caus malfunctions.

Some files may be protected against read/write access or deletion. Some of these files are virtual files, such as firmware images, or protected files, such as EDS files.

File categories

The files of the file system are categorized as follows:

- System directories or system files used by the operating system
- Files accessible to the user

ⓘ INFO

For more information refer to the application-oriented manual "File System" which can be downloaded from our *homepage*.

7.6.1 Directories

System directories

The user is not allowed to delete system directories. System directories even survive formatting.

Directory	Description
\System	■ System configuration ■ System information ■ Splash screen (boot image) ■ Screenshot
\App	Directory for applications
\Data	Folder for storing data.
\Windows	Windows CE system directory
\	RAM disk drive
\USB	Root directory of the USB flash drive

7.7 Storage options - Overview

7.7.1 Types of program and data memory

The controller features several types of program and data memory. There is, for example, volatile and non-volatile memory. Volatile memory loses its content at switching off. Non-volatile memory keeps its content even when the power supply is off. This type of memory is also referred to as remanent memory, and it is located directly in the CPU or in separate I/O modules.

7.7.2 Operating system memory

The OS is stored to a non-volatile flash memory in the CPU. Therefore, the OS can be executed immediately after the device is powered up.

Properties

- Internal flash memory for storing OS data
- Internal volatile RAM for storing OS data

Type of access

- The user is not allowed to directly access the OS memory.
- Changes to the OS can be made by means of an OS update.

7.7.3 File system memory

The file system memory is for storing data and program files.

Properties

- Non-volatile
- Size of internal flash disk: 368 MByte

Type of access

- By operating system
- By JetSym
- By means of file commands from within the application program

7.7.4 Application program memory

By default, the application program is uploaded from JetSym to the JCM-501-E01 and is stored there.

Properties

- Stored as file within the file system
- Default directory *\app\program name*
- Files may also be stored to other directories (or USB flash drive)

Type of access

- By operating system
- By JetSym
- By means of file commands from within the application program

7.7.5 Flash disk

Data can be stored directly on the flash disk. The following rules apply when using a flash disk:

- Do not open more than 8 files at a time.
- Separate directory names by a slash “/”.
- The properties of all created files hold their creation date and time as provided by the controller.
- Date, time, and file size are not available for all system files.

Flash disk Capacity

The following disk space is available to the user:

Parameter	Value
Flash disk capacity, total	512 MB
Size of folder **App** (of the a.m. capacity)	64 MByte
Size of folder **Data** (of the a.m. capacity)	368 MByte

Tab. 36: Flash disk capacity

Properties

The properties of the internal flash disk drive are listed below:

- Up to 7 directory levels and 1 file level are allowed.
- No case sensitivity.
- Directory and file names with a length of up to 63 characters are possible.
- All characters except "/" and ".." are permitted for directory and file names
- The location of the directories "App" and "Data" is on the flash disk drive.

7.7.6 USB flash drive

USB memory expansion

An optional USB flash drive lets you expand the storage capacity of the internal memory.

- Tested storage capacities range from 256 MB … 8 GB.
- No case sensitivity.
- The USB stick must be formatted using FAT 16 or FAT 32.
- For directory and file names up to 260 characters are allowed.
- The following characters are not permitted in directory and file names: "/", "\", ":", "*", "?", "<", ">" and "|"
- There is no user/access administration.

Jetter AG cannot guarantee the proper functioning of all USB flash drives available on the market.

7.7.7 Storing registers and variables

Storing to a non-volatile (remanent) memory

Registers and variables of the application program can be globally stored to a non-volatile memory with dedicated registers.
The register variables %VL are always 4 bytes in size. They are not initialized by the operating system.
These %RL registers always occupy 480,000 bytes.
The number of %VL register variables is limited to 120,000.
The register array for %VL or %RL ranges from 1000000 to 1119999.

Storing to volatile (non-remanent) memory

Variables of the application program can be stored to volatile memory.
Global variables that do not have a static assignment to addresses and are stored compactly.
Their register number starts with the value 0.

7.7.8 Flag

Flags are one-bit operands. This means they can either have the value TRUE or FALSE.

Properties of user flags

- Global variables which are assigned to permanent addresses (%MX)
- Non-volatile
- Quantity: 256
- Flag numbers: 0 ... 255

Properties of overlaid user flags

- Global variables which are assigned to permanent addresses (%MX)
- Non-volatile
- Overlaid by registers 1000000 ... 1000055
- Quantity: 1,792
- Flag numbers: 256 ... 2047

Properties of special flags

- Global variables which are assigned to permanent addresses (%MX)
- When the operating system is launched, special flags are initialized using their default values.

- Quantity: 256
- Flag numbers: 2048 ... 2303

Type of access

- By JetSym
- From HMIs
- From the application program

7.8 Automatic copying of controller data

This chapter describes the Autostart feature which lets you copy data within the JCM-501-E01. To this end, you can create a command file which is then stored along with the data to a USB flash drive. This command file is then automatically processed when the USB flash drive is inserted.

Functions within the local file system

The Autostart function executes the following functions:

- Creating directories
- Deleting directories
- Copying files
- Deleting files

Areas of application

The AutoStart function is typically used in situations where

- remote maintenance is not possible
- there is no PC on site
- the operator is not able or should not be allowed to make modifications to the plant

The following actions can be taken using the AutoStart function:

- Modify the application program
- Modify the application data
- Modify the controller configuration
- Operating system update (JCM-501-E01)

Prerequisites

For automatic copying of controller data, the following prerequisites must be fulfilled:

- The programmer must be familiar with the file system.

Terminology

In this description, *Full Name* means the name of the file or directory including its full path.

7.8.1 Loading the Autostart function

The AutoStart function should only be carried out during the boot phase (after power-up) of the JCM-501-E01.

Relevant directories

	Value	Remarks
File name	**autostart.bat**	All lower case letters
Directory - USB	**\USB**	Root directory on the USB flash drive

Tab. 37: Relevant directories

Loading the Autostart function

✓ You have created the command file and stored it to the respective directory.

1. Insert the USB flash drive into the USB port.
2. Switch the device ON.

⇨ The device boots and loads the **autostart.bat** file.

7.8.2 Executing the AutoStart function

During the boot phase in *autostart* mode, the device executes the commands in the command file.

Executing the AutoStart function

The operating system of the JCM-501-E01 processes the autostart function in the following steps:

Step	Description
1	The file **\USB\autostart.bat** is loaded from the USB stick.
2 … n	The commands are processed in ascending order.

7.8.3 Terminating the AutoStart mode

The last command in the **autostart.bat** file terminates the *AutoStart* mode.

Restart

As an option, you can reboot the device by placing the following command in the last line of your command file:

```
del \System\reset.exe
```

Exiting AutoStart mode

► To exit the *Autostart* mode, remove the USB flash drive.

7.8.4 autostart.bat - Structure

The command file is a text file with command and comment lines:

- You can insert blank lines as required.
- Start each comment line with *REM*.

In these sections you can specify commands which are then executed by the Autostart function.

Processing commands

The Autostart function processes the commands in descending order. Furthermore, this function lets you insert jumps into the processing sequence. A jump is defined by the keyword `goto` and a destination. The destination must be preceded by a colon (:).

A **simple jump** is defined as follows:

```
goto end
{skipped block}
:end
```

A **conditional jump** is defined as follows:

```
if {condition} goto end
{skipped block}
:end
```

Available commands

The commands correspond to common Windows® command line syntax.

7.8.5 Example of a command file

Task

New functions are to be added to an installed JCM-501-E01. To this end, the following modifications are required:

- Operating system update
- New application program
- New values for some of the registers

Solution

You copy the required files to a USB flash drive and create a command file for the Autostart function.

USB flash drive - Content

The USB flash drive contains the following files:

- The **autostart.bat** file
- The new OS
- A *.da file containing the new register values
- A **start.ini** file and a *.es3 file containing the new application program

Command file

```
@echo off
if not exist \app\autostart.exe goto end
if exist \app\update.ini goto end
if exist \app\usb_update_process_marker goto dm
echo \data\update\jvm_ce0_1.00.0.04.os >\app\update.ini
md \data\update
copy \%1\jvm_ce0_1.00.0.04.os \data\update\jvm_ce0_1.00.0.04.os
echo >\app\usb_update_process_marker
md \app\progtest
copy \%1\progtest\progtest.es3 \app\progtest\progtest.es3
copy \%1\register.da \app\register.da
del \System\reset.exe
goto end
:dm
del \app\usb_update_process_marker
:end
```

7.8.6 Data files

File format

The data file consists of the following elements:

- Pure text file
- Each entry must be in a separate line of text
- Each line must be completed by carriage return/line feed
- Comment lines must be preceded by ";"
- Each data file must start with the entry *SD1001*.

Data lines

A data line consists of the following elements:

- ID of the variable at the beginning of the line
- Now follows the number of the variable separated by a blank or tab
- Then follows the value of the variable separated by a blank or tab

Variable ID	Variable type
FS	Flag
RS	Integer register
QA	Floating-point registers

Example

```
SD1001
; Data File - Jetter AG
;
; Registers 1000000 ... 1000005
RS 1000000 12345
RS 1000001 2
RS 1000002 -1062729008
RS 1000003 502
```

```
RS 1000004 50
RS 1000005 3
QS 1009000 3.14
;
; Flags 10 ... 13
FS 10 0
FS 11 1
FS 12 1
FS 13 0
```

Automatically loading data file information

The JCM-501-E01 has a mechanism that allows a data file to be loaded automatically before the application program starts. You must name the data file **register.da** and store it in the **App** folder.

Workflow

The table below shows how the device retrieves data file information:

Level	Description
1	If the data file **register.da** has been stored to the directory **App**, the device will detect this file the next time the device is started.
2	The device retrieves the file.
3	The device maps the values to the registers.
4	Once the device has retrieved the file, it deletes the data file.
5	The device loads the application program.

7.9 Operating system update

Jetter AG are continuously striving to enhance the operating systems of their products. Enhancing means adding new features, upgrading existing functions and fixing bugs. Current OS files are available for download on our homepage in the *Downloads* area of the respective product.

More information on this subject is available on our website.

Start | Jetter - We automate your success.

Transfer options

There are several options to transfer the OS file to the device:

- From a USB flash drive
- Via JetEasyDownload
- Via directory *\App*

7.9.1 Performing the operating system update via USB

A USB flash drive lets you transfer an OS file to the JCM-501-E01.

Contents of the batch file

The batch file **autostart.bat** must have the following contents:

```
@echo off
if not exist \App\autostart.exe goto end
if exist \App\update.ini goto end
if exist \App\usb_update_process_marker goto dm
echo \Data\update\jcm_ce0.os >\App\update.ini
if not exist \Data\update md \Data\update
copy \%1\jcm_ce0.os \Data\update\jcm_ce0.os
echo.>\App\usb_update_process_marker
del \System\reset.exe
goto end
:dm
del \App\usb_update_process_marker
:end
```

Updating the operating system

✓ An OS file for the JCM-501-E01 is available.
✓ The operating system of the JCM-501-E01 as of version 4.07.0.12 is running.
✓ The device remains powered on during the operating system update.

1. Copy the OS file to your USB flash drive. This drive must be FAT formatted.
2. Create a batch file on the USB flash drive and name it **autostart.bat**. Contents of the batch file: See above.
3. Replace all entries **jcm_ce0** with the actual name of the OS file.
4. Switch off the JCM-501-E01.
5. Insert the USB flash drive into the JCM-501-E01.
6. Switch on the JCM-501-E01.
   ⇨ About 10 seconds later the device automatically launches the update process.

⇨ The device reboots automatically and starts the application.

Update sequence

The operating system update runs in the following chronological order:

Level	Description
1	The files are transferred.
2	The device is reset.
3	The files are installed.
4	The device is reset.
5	The application appears

Log file for documentation purposes

The update process is documented in the **\App\update.log** file.

7.9.2 Performing an OS update via JetEasyDownload

To update the operating system of a JCM-501-E01 use a Peak CAN dongle and the command line tool JetEasyDownload (version 1.00.0.15 or higher) by Jetter.

Performing the update

JetEasyDownload -H100 -T127 -B5 -S8000 - Ljcm_ce0_X.XX.X.XX.os

✓ JetEasyDownload and Peak CAN dongle are ready for use.
✓ There is a CAN connection between Peak CAN dongle and JCM-501-E01.

1. Call up JetEasyDownload with the above parameters and a valid OS file.
   ⇨ The device carries out a reset.
   ⇨ The device starts in boot loader mode with a single heartbeat in init state (data = 0x00).
2. Wait for approx. 7 seconds while the device formats the flash memory.
   ⇨ The device starts the download process.

⇨ The device starts automatically with the new firmware.

7.10 Application program

The user determines the program that is to be executed. When uploading the application program to the controller, this program is stored as a file to the internal flash disk. The device enters the path and file name into the **\App\start.ini** file.

Path and file name

By default, JetSym creates in the */app* directory a subdirectory and assigns the project name to it. Then, JetSym stores the application program to this subdirectory assigning the extension ***.es3** to it. Path and file names are always converted into lower case letters.

\App\start.ini - Structure

This file is a text file with one section holding 2 entries:

Element	Description
[Startup]	Section name
Project	Path to the application program file. This path is relative to \ *app*.
Program	Name of the application program file

Example

```
[Startup]
Project = test_program
Program = test_program.es3
```

The application program is loaded from the file **\App\test_program\test_program.es3**.

Loading the application program

When the application program is restarted via JetSym or after booting the JCM-501-E01, the application program is loaded via the file system and executed.

The application program is loaded by the OS of the JCM-501-E01 as follows:

Level	Description
1	The operating system reads the file **\App\start.ini** from the internal flash disk.
2	The OS evaluates the **Project** entry. It contains the path leading to the application program file.
3	The OS evaluates the **Program** entry. This entry contains the program name.
4	The OS loads the application program from the file **<Project>/<Program>**.

8 Registers - Overview

This register overview describes the registers of the JCM-501-E01 in summarized form.

8.1 Default address on the CANopen® bus

Default address of the JCM-501-E01:

Node ID: 127 (0x7F)

8.2 General overview - Registers

Register ranges		Description
100000 ...	100999	Electronic Data Sheet (EDS)
106000 ...	106999	CAN
108000 ...	108999	CPU/backplane
200000 ...	209999	General system registers
210000 ...	219999	Application program
310000 ...	319999	File system/data files
1000000 ...	1029999	Application registers (non-volatile)

8.3 Flags - General overview

Register ranges		Description
0 ...	255	Non-volatile application flags
256 ...	2047	Mapped to registers R 1000000 ... 1000055
2048 ...	2303	Special flags

8.4 Electronic nameplate

EDS data can be retrieved for the CPU or the entire device.

Register ranges		Description
100500	0	CPU
	1	Baseboard
	Identification:	
100600		Internal version number
100601		Module ID
100602 ...	100612	Module name (register string)
100613		PCB revision
100614		PCB options
	Production:	
100700		Internal version number
100701 ...	100707	Serial number (register string)
100708		Day
100709		Month
100710		Year
100711		TestNum.
100712		TestRev.

Register ranges		Description
	Features:	I/O module
100800		Internal version number
100801		MAC address (Jetter)
100802		MAC address (device)

8.5 Electronic name plate (device as a whole)

Register ranges		Description
	Production:	
100900		Internal version number
100901 ...	100907	Serial number (register string)
100708		Day
100709		Month
100710		Year
	Identification:	
100950		Internal version number
100951		Module ID
100952 ...	100962	Module name (register string)
100965		Config ID
100966		Vendor ID
100967		Variant ID
100968		Type ID
100992		Navision ID
100993		FBG version

8.6 LEDs

Register ranges		Description
108008		LEDs D1 and D2
	Bit:	
	0	LED D1 green
	1	LED D1 red
	2	LED D2 green
	3	LED D2 red

8.7 CAN

Register ranges	Description
106000	Baud rate CAN 1
106001	Node ID CAN 1
106100	Baud rate CAN 2
106101	Node ID CAN 2

8.8 Serial interface RS-232

Register ranges	Description
103101	Protocol
103102	Baud rate
103103	Number of data bits per character
103104	Number of stop bits

Register ranges	Description	
103105	Parity	
103107	Activating the serial interface	
	0=	The serial interface is inactive, no data can be received/transmitted.
	1=	The serial interface is active, data can be received/transmitted.
103110	Sending buffer	
103111	Sending buffer filling level	
103112	Receive buffer (without deleting characters on reading)	
103113	Receive buffer (with deleting characters on reading)	
103114	Receive buffer filling level	
103115	Receive buffer, 16-bit, little endian	
103116	Receive buffer; 16-bit; big endian	
103117	Receive buffer, 32-bit, little endian	
103118	Receive buffer; 32-bit; big endian	
103119	Error counter	

8.9 Flash memory

Register ranges	Description
107510	Available sectors
107511	Used sectors
107512	Blocked sectors
107513	Free sectors
107520	Size of the flash disk in bytes
107521	Used memory in bytes
107522	Blocked memory in bytes
107523	Free memory in bytes

8.10 System information

Register ranges		Description
108500 ...	108509	JetVM-DII version string
108510 ...	108519	Version string of the host application
108520 ...	108529	File name of the host application
108530 ...	108539	OS version (string)
108570		CPU type
108571		Number of CPUs
108573		Physical RAM
108574		Free physical RAM
108575		Memory utilization (in %)
108581		Screen width (in pixels)
108582		Screen height (in pixels)
108590		HID version

8.11 USB flash drive

Register ranges	Description
109000	Bit 0 = 1: Data medium is available
	Bit 1 = 1: Data medium is ready
109001	1= Data medium is write-protected (only valid if R 109000 = 3)
109002	Size in MBytes
109003	Free memory in MB
109004	Memory available to users in MB
109005	Memory used in MB

8.12 General system registers

Register ranges		Description	
200000		OS version (major * 100 + minor)	
200001	Bit 0 = 1	Application program is running	
200008		Error register identical with 210004	
	Bit 8	Illegal jump	
	Bit 9	Illegal call	
	Bit 10	Illegal index	
	Bit 11	Illegal opcode	
	Bit 12	Division by 0	
	Bit 13	Stack overflow	
	Bit 14	Stack underflow	
	Bit 15	Illegal stack	
	Bit 16	Failed to load application program	
	Bit 24	Timeout - Cycle time	
	Bit 25	Timeout - Task lock	
	Bit 31	Unknown error	
200168		Bootloader version (IP format)	
200169		OS version (IP format)	
201000		Runtime registers in milliseconds	Read/write
201001		Runtime register in seconds	Read/write
201002		Runtime register in R 201003	Read/write
201003		10 ms units for R 201002	Read/write
201004		Runtime registers in milliseconds	Read
201005		Runtime registers in microseconds	Read
202960		Password for system command register:	0x424f6f74
202961		System command register	
202980		Error history: Number of entries	
202981		Error history: Index	
202982		Error history: Entry	
203100 ...	203107	32-bit overlaying	Flags 0 ... 255
203108 ...	203123	16-bit overlaying	Flags 0 ... 255

Register ranges		Description	
203124 ...	203131	32-bit overlaying	Flags 2048 ... 2303
203132 ...	203147	16-bit overlaying	Flags 2048 ... 2303
209700		System logger: Global enable	
209701 ...	209739	Enabling system components	

8.13 Application program

Register ranges		Description
210000		State of application program
	Bit 0 = 1	Application program is running
210001		JetVM version
210004	(bit-coded)	Error register
	Bit 8	Illegal jump
	Bit 9	Illegal call
	Bit 10	Illegal index
	Bit 11	Illegal opcode
	Bit 12	Division by 0
	Bit 13	Stack overflow
	Bit 14	Stack underflow
	Bit 15	Illegal stack
	Bit 16	Error when loading the application program
	Bit 24	Timeout - Cycle time
	Bit 25	Timeout - Task lock
	Bit 31	Unknown error
210006		Highest task number
210007		Minimum program cycle time
210008		Maximum program cycle time
210009		Current program cycle time
210011		Current task number
210050		Current program position within an execution unit
210051		ID of the execution unit being processed
210056		Desired total cycle time in µs
210057		Calculated total cycle time in µs
210058		Maximum time slice per task in µs
210060		Task ID (for R210061)
210061		Priority for task [R210060]
210063		Length of scheduler table
210064		Index in scheduler table
210065		Task ID in scheduler table
210070		Task ID (for R210071)
210071		Timer number (0 ... 31)
210072		Manual triggering of a timer event (bit-coded)
210073		End of cyclic task (task ID)
210074		Command for cyclic tasks
210075		Number of timers
210076		Timer number (for R210077)
210077		Timer value in milliseconds
210100 ...	210199	Task state

Register ranges		Description
210400 ...	210499	Task - Program address
210600		Task ID of a cyclical task (for R210601)
210601		Processing time of a cyclical task in per mil figure
210609		Tasklock timeout in ms
		-1 Monitoring disabled
210610	(bit-coded)	Timeout
	Bit: 0	-> Timer 0

8.14 File system/data file function

Register ranges	Description
312977	Status of file operation
312978	Task ID

8.15 Application registers

Register ranges		Description
1000000 ...	1005999	32-bit integer (remanent)

8.16 Flag

32 combined flags				
203100	0 ... 31		203104	128 ... 159
203101	32 ... 63		203105	160 ... 191
203102	64 ... 95		203106	192 ... 223
203103	96 ... 127		203107	224 ... 255

16 combined flags				
203108	0 ... 15		203116	128 ... 143
203109	16 ... 31		203117	144 ... 159
203110	32 ... 47		203118	160 ... 175
203111	48 ... 63		203119	176 ... 191
203112	64 ... 79		203120	192 ... 207
203113	80 ... 95		203121	208 ... 223
203114	96 ... 111		203122	224 ... 239
203115	112 ... 127		203123	240 ... 255

16 combined special flags				
203132	2048 ... 2063		203140	2176 ... 2191
203133	2064 ... 2079		203141	2192 ... 2207
203134	2080 ... 2095		203142	2208 ... 2223
203135	2096 ... 2111		203143	2224 ... 2239
203136	2112 ... 2127		203144	2240 ... 2255
203137	2128 ... 2143		203145	2256 ... 2271
203138	2144 ... 2159		203146	2272 ... 2287
203139	2160 ... 2175		203147	2288 ... 2303

32 combined special flags				
203124	2048 ... 2079		203128	2176 ... 2207
203125	2080 ... 2111		203129	2208 ... 2239
203126	2112 ... 2143		203130	2240 ... 2271
203127	2144 ... 2175		203131	2272 ... 2303

Application registers with overlaid flags				
1000000	256 ... 287		1000028	1152 ... 1183
1000001	288 ... 319		1000029	1184 ... 1215
1000002	320 ... 351		1000030	1216 ... 1247
1000003	352 ... 383		1000031	1248 ... 1279
1000004	384 ... 415		1000032	1280 ... 1311
1000005	416 ... 447		1000033	1312 ... 1343
1000006	448 ... 479		1000034	1344 ... 1375
1000007	480 ... 511		1000035	1376 ... 1407
1000008	512 ... 543		1000036	1408 ... 1439
1000009	544 ... 575		1000037	1440 ... 1471
1000010	576 ... 607		1000038	1472 ... 1503
1000011	608 ... 639		1000039	1504 ... 1535
1000012	640 ... 671		1000040	1536 ... 1567
1000013	672 ... 703		1000041	1568 ... 1599
1000014	704 ... 735		1000042	1600 ... 1631
1000015	736 ... 767		1000043	1632 ... 1663
1000016	768 ... 799		1000044	1664 ... 1695
1000017	800 ... 831		1000045	1696 ... 1727
1000018	832 ... 863		1000046	1728 ... 1759
1000019	864 ... 895		1000047	1760 ... 1791
1000020	896 ... 927		1000048	1792 ... 1823
1000021	928 ... 959		1000049	1824 ... 1855
1000022	960 ... 991		1000050	1856 ... 1887
1000023	992 ... 1023		1000051	1888 ... 1919
1000024	1024 ... 1055		1000052	1920 ... 1951
1000025	1056 ... 1087		1000053	1952 ... 1983
1000026	1088 ... 1119		1000054	1984 ... 2015
1000027	1120 ... 1151		1000055	2016 ... 2047

8.17 System Functions

For reasons of compatibility, the system functions are listed below.
In JetSym STX, use the corresponding JetSym STX functions instead of system functions

System functions	Description
4	Converting BCD to HEX
5	Converting HEX to BCD
20	Square root
21	Sine
22	Cosine
23	Tangent
24	Arc sine

System functions	Description
25	Arc cosine
26	Arc tangent
27	Exponential function
28	Natural logarithm
29	Absolute value
30	Separation of digits before and after the decimal point
50	Sorting register values
60	CRC generation for Modbus RTU
61	CRC check for Modbus RTU
65/67	Reading register block via Modbus/TCP
66/68	Writing register block via Modbus/TCP
80/85	Initializing RemoteScan
81	Starting RemoteScan
82	Stopping RemoteScan
90	Writing a data file
91	Appending a data file
92	Reading a data file
96	Deleting a data file
150	Configuring NetCopyList
151	Deleting NetCopyList
152	Sending NetCopyList

System functions	Corresponding JetSym STX function
4	Function Bcd2Hex(Bcd: int): Int;
5	Function Hex2Bcd(Hex: int): Int;
50	Function QSort(DataPtr: Int, ElementCnt: Int, Element-Size: Int, SortOffset: Int, SortType: STXBASETYPE, SortMode: QSORTMODE): Int;
60	Function ModbusCRCgen(FramePtr: Int, Length: int): Int;
61	Function ModbusCRCcheck(FramePtr: Int, Length: int): Int;
65/67	Function ModbusReadReg(Const Ref MbParam: MOD-BUS_PARAM): Int;
66/68	Function ModbusWriteReg(Const Ref MbParam: MOD-BUS_PARAM): Int;
80/85	Function RemoteScanConfig(Protocol: RSCAN_PROTO-COL, Elements: Int, Const Ref Configuration: RSCAN_DSCR): Int;
81	Function RemoteScanStart(Protocol: int): Int;
82	Function RemoteScanStop(Protocol: int): Int;
90/91	Function FileDAWrite(Const Ref FileName: String, Const Ref Mode: String, VarType: DAWRITE_TYPE, First: Int, Last: int): Int;
92	Function FileDARead(Const Ref FileName: String): Int;
150	Function NetCopyListConfig(IPAddr: Int, IPPort: Int, Const Ref List: TNetCopyLinstL): Int;
151	Function NetCopyListSend(Handle: int): Int;
152	Function NetCopyListDelete(Handle: int): Int;

8.18 System Functions

For reasons of compatibility, the system functions are listed below.
In JetSym STX, use the corresponding JetSym STX functions instead of the system functions.

System functions	Description
4	Converting BCD to HEX
5	Converting HEX to BCD
20	Square root
21	Sine
22	Cosine
23	Tangent
24	Arc sine
25	Arc cosine
26	Arc tangent
27	Exponential function
28	Natural logarithm
29	Absolute value
30	Separation of digits before and after the decimal point
50	Sorting register values
90	Writing a data file
91	Appending a data file
92	Reading a data file
96	Deleting a data file

System functions	Corresponding JetSym STX function
4	Function Bcd2Hex(Bcd: int): Int;
5	Function Hex2Bcd(Hex: int): Int;
50	Function QSort(DataPtr: Int, ElementCnt: Int, ElementSize: Int, SortOffset: Int, SortType: STXBASETYPE, SortMode: QSORTMODE): Int;
90/91	Function FileDAWrite(Const Ref FileName: String, Const Ref Mode: String, VarType: DAWRITE_TYPE, First: Int, Last: int): Int;
92	Function FileDARead(Const Ref FileName: String): Int;

8.19 Real-time clock

Direct access:	
102910	Milliseconds
102911	Seconds
102912	Minutes
102913	hours
102914	Day of the week (0 = Sunday)
102915	Day
102916	Month
102917	Year

Buffer access:	
102920	Milliseconds
102921	Seconds
102922	Minutes

Buffer access:	
102923	hours
102924	Day of the week (0 = Sunday)
102925	Day
102926	Month
102927	Year
102928	Read/write trigger

9 Maintenance and repairs

9.1 Maintenance, repairs and disposal

Maintenance

This device is maintenance-free.
Therefore, for the operation of the device no inspection or maintenance are required.

Repairs

Defective components could cause dangerous malfunctions and could compromise safety.
Only the manufacturer is allowed to repair the device.
Do not open the device!

Disposal of obsolete equipment

The device must be disposed of in accordance with the Environmental Product Declaration EPD. Applicable local environmental directives and regulations must be complied with. This product must be disposed of as waste electronic equipment. Waste packaging material must be recycled or reused.

Modifications and alterations to the device

Modifications and alterations to the device and its functions are not allowed. In the case of modifications to the device, any liability is excluded.

The original parts are specifically designed for the device. Parts and equipment from other manufacturers must, therefore, not be used.

Any liability for any damages resulting from the use of non-original parts and equipment is excluded.

9.2 Storage and shipment

Storage

When storing the device observe the environmental conditions given in chapter “Technical specifications”.

Shipment and packaging

The device contains electrostatically sensitive components which can be damaged if not handled properly. Damages to the device may impair its reliability.

To protect the device from impact or shock, it must be shipped in its original packaging, or in an appropriate protective ESD packaging.
In case of damaged packaging inspect the device for any visible damage, and inform your freight forwarder and the Jetter AG of the damage caused during shipment. If the device is damaged or has been dropped, it is strictly forbidden to use it.

10 Service

10.1 Customer service

Should you have any questions, suggestions, or problems, please don't hesitate to contact our service representatives. To contact them, please call our technical hotline or use the contact form on our homepage:

Technical hotline | Jetter - We automate your success.

You are also welcome to send an e-mail to our technical hotline:

hotline@jetter.de

Please supply the following information when contacting our technical hotline:

- Hardware revision and serial number
  For the hardware revision number, please refer to the nameplate.
- OS version
  To determine the operating system version, use the functions of the development environment.

11 Spare parts and accessories

NOTICE

Inadequate accessories might cause damage to the product

Parts and equipment from other manufacturers might impede the function of the device and cause damage to the product.

► Only use accessories recommended by Jetter AG.

11.1 Accessories

ⓘ INFO

The accessories are not part of the scope of delivery.

Apt accessories can be obtained from Jetter AG.

Accessories	Item number
Connector set consisting of Deutsch housing, crimp contacts (female)	10001264
Connection cable consisting of Deutsch housing, pre-assembled and tested with 1.5 m open stranded wire	60878741
Connection cable consisting of Deutsch housing, assembled and tested with 0.5 m open wire, Sub-D for CAN and power plug & switch	60878737
Interconnecting programming cable consisting of Deutsch housing on both sides, assembled and tested, CAN1 brought out to Sub-D	60882076

Tab. 38: Accessories

List of figures

List of tables

Jetter AG
Graeterstrasse 2
71642 Ludwigsburg
www.jetter.de

E-mail info@jetter.de
Phone +49 7141 2550-0

60884486

We automate your success.