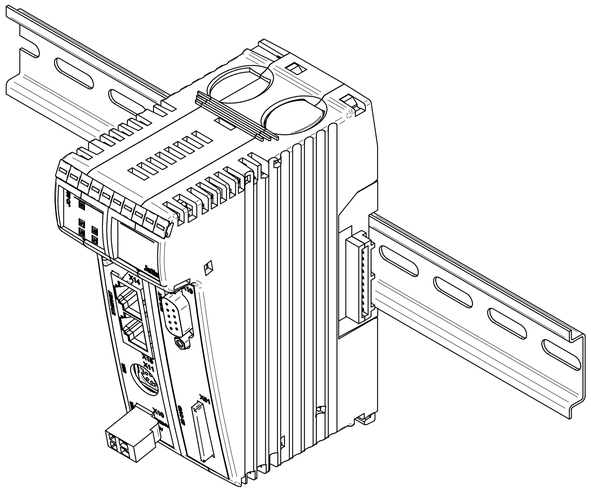

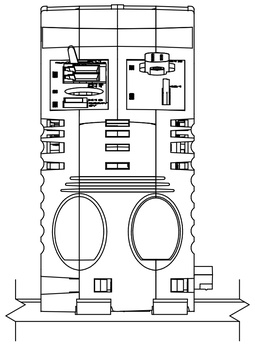

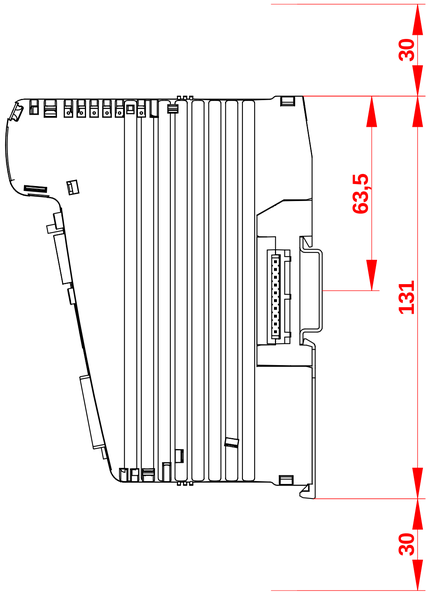
30
63,5
131
30

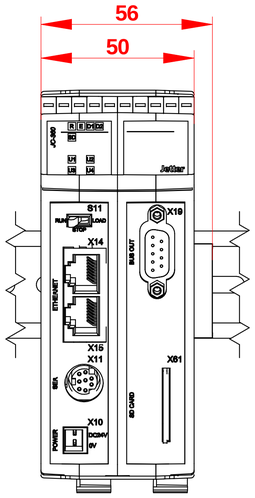
56
50
JC-360
S11
RUN
STOP
LOAD
X19
X14
ETHERNET
RS485 OUT
X15
X11
X81
RS485
SD CARD
X10
POWER
DC24V
0V

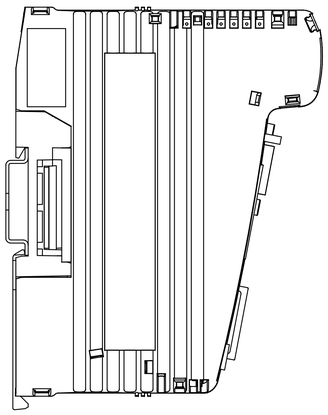

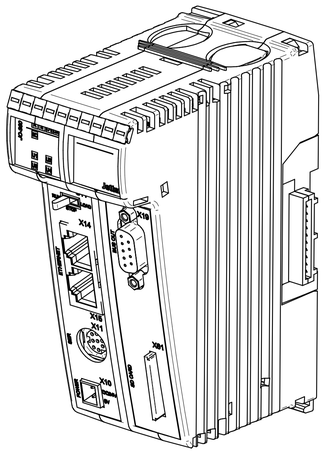

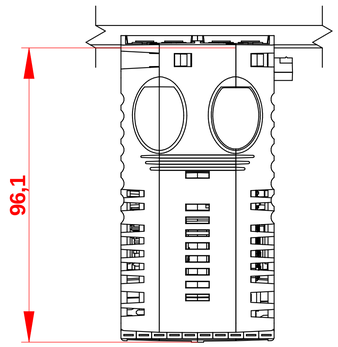
96,1

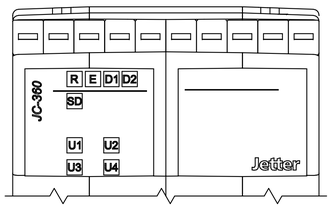
JC-360
R
E
D1
D2
SD
U1
U2
U3
U4
Jetter